SERVICE MANUAL

CD-94MK2

4822 725 50353

marantz®

COMPACT disc DIGITAL AUDIO

model CD-94MK2

Compact Disc Player

MARANTZ DESIGN AND SERVICE

Using superior design and selected high grade components, MARANTZ company has created the ultimate in stereo sound.
Only **original MARANTZ parts** can insure that your MARANTZ product will continue to perform to the specifications for which it is famous.

Parts for your MARANTZ equipment are generally available to our National Marantz Subsidiary or Agent.

MARANTZ INTERNATIONAL
Vestdijk 9
5600 MD Eindhoven
The Netherlands
Phone: +31/40.758290
Telefax: +31/40.75.82.99
Telex: 35000 PHTC NL routing IND NLMTFAT

ORDERING PARTS:

Parts can be ordered either by mail or by telex. In both cases, correct part number has to be specified.
The following information must be supplied to eliminate delays in processing your order:

1. Complete address
2. Complete part numbers and quantities required
3. Description of parts
4. Model number for which part is required
5. Way of shipment
6. Signature: any order form or telex must be signed otherwise such part order will be considered as null and void.

PARTS ORDERING

Parts may be ordered at the following addresses:

AUSTRIA
HORNYPHON
Vertriebsgesellschaft GmbH
Wienerbergstrasse 1
A 1101 Wien
Austria
Telex: 132.332

BELGIUM
SVD DIVISIO.N MARANTZ
Industrialaan 1
1720 Groot-Bijgaarden
Belgium
Telex: 24466

CHILE
MARANTZ
DIVISION OF PHILIPS S.A.
AV. Santa Maria, 0760
Casilla 2687
Santiago
Telex: 240.239

DENMARK
MARANTZ
DIVISION OF PHILIPS
SERVICE A/S
Prage Boulevard 80
Postbox 1919
DK-2300 Kobenhavn S
Denmark
Telex: 31201

FINLAND
MARANTZ
DIVISION OF OY PHILIPS Ab
Kalvokatu 8
00100 Helsinki
Finland
Telex: 124811

FRANCE
MARANTZ FRANCE
4 Rue Bernard Palissy
92600 Asnières
France
Telex: 611651

GERMANY
MARANTZ GERMANY GmbH
Max-Planck-Strasse 22
6072 Dreieich 1
Germany
Telex: 529821

THE NETHERLANDS
Elpro Marantz
Wint Hontlaan 28
3526 KV Utrecht
The Netherlands
Telex: 4748

NORWAY
MARANTZ
DIVISION OF PHILIPS A/S
Sandstuveien 40
0680 Oslo 6
Norway
Telex: 72640

GREAT BRITAIN
MARANTZ AUDIO U.K. Ltd
Unit 15/18
Saxon Way Industrial Estate
Moor Lane
Harmondsworth UB7 OLW
Great Britain
Telex: 935196

GREECE
SHERTON ELECTRONICS S.A.
P.O.Box 21025
Hippocratus Street 188
Athens 11471
Greece
Telex: 216.795

JAPAN
MARANTZ JAPAN, Inc.
35-1, 7-chome, Sagamiono
Sagamihara-shi, Kanagawa
Japan

KUWAIT
AL ALAMIAH ELECTRONICS
Ussama Building
Fahd al Saleem Street
P.O.Box 23781
Safat-Kuwait
Telex: 22694

ITALY
MARANTZ ITALIANA S.P.A.
Via Chiese, 74
20126 Milano
Italy

SAUDI ARABIA
AL ALAMIAH ELECTRONICS
P.O.Box 5954
University Street
Riyadh 11432
Saudi Arabia
Telex: 401530

SOUTH AFRICA
MARANTZ
DIVISION OF PHILIPS S.A.
Main Road Martindale
P.O. Box. 58086
Newville 21114
South Africa

SPAIN
PHONO S.A.
Ignacio Iglesias 10
Badalona (Barcelona)
Spain
Telex: 59355

SWEDEN
MARANTZ
DIVISION OF PHILIPS
Försäljning AB
Tegeluddsvägen 1
S-115 84 Stockholm
Sweden
Telex: 14060

SWITZERLAND
DYNAVOX ELECTRONICS
Route de Villars 105
1701 Fribourg
Switzerland
Telex: 942377

TURKEY
DOGRUOL Ltd.
I.M.C.
6 Blok N°6310
Uniapani
Istanbul
Turkey
Telex: 22085

MALTA
CACHIA & GALEA
Republic Street, 68D
Valetta
Telex: 1682

PORTUGAL
MARANTZ
Divisao philips S.A. service
Outurela-carnaxide
2795 LinDA-A-VELHA
Telex: 43906

All of the above locations are fully equipped to take care of your total service needs. Because various countries have differing configuration requirements, it is necessary that you contact the service facility in your particular country. In the event that there is no service location listed for your country, please, contact the nearest facility for the necessary assistance.

In case of difficulties, do not hesitate to contact the Technical Department at abovementioned address.

MODEL CD-94MK2 COMPACT DISC PLAYER

1. P.W. BOARDS

As can be seen from the circuit diagram the chassis of Model CD-94MK2 consists of the following units. Each unit mounted on a printed circuit board is described within the square enclosed by a bold dotted line on the circuit diagram.

1. Demo	**mounted on P.W. Board PD16**
2. Optical Out	**mounted on P.W. Board PD26**
3. Feature μ-COM	**mounted on P.W. Board PM16**
4. Audio/Power	**mounted on P.W. Board PP16**
5. DAC	**mounted on P.W. Board PP26**
6. 3 Reg	**mounted on P.W. Board PP36**
7. Headphone Amp	**mounted on P.W. Board PR16**
8. Power Switch	**mounted on P.W. Board PS16**
9. Ten Key	**mounted on P.W. Board PS26**
10. Servo	**mounted on P.W. Board PV16**
11. Servo Module	**mounted on P.W. Board PV26**
12. Photo Reflector	**mounted on P.W. Board PV36**
13. Display	**mounted on P.W. Board PY16**
14. Lamp	**mounted on P.W. Board PY26**

How to use this service manual

- The "Common parts" which Marantz Japan, Inc. has established are eliminated from this service manual.
- These "Common parts" are applied to all models in the service manuals arranged and issued by MJI.
- To indicate clearly the common parts in the schematic diagram, a line is drawn above or under the Ref. Desig. No. of applicable parts.
- "Common parts" can be supplied from the Marantz service center as ever.
  In case of ordering, please establish the parts number of 12 N/C'S following the procedure mentioned in this service manual "How to establish the parts number for common parts".

1) Please correctly write the parts number of 12 N/C'S following the rule.

ELECTRICAL MEASUREMENTS AND ADJUSTMENTS

Specification measurement

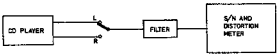

To measure the specification use can be made of audio test disc 4822 397 30085.
Use a 7th order filter, e.g. 4822 395 30204 (see Figure), to measure:
— Total harmonic distortion (THD).
— Intermodulation distortion.
— Signal-to-noise (S/N).

Laser power supply (POS. VOLT. SH.)

For check and preliminary adjustment of the laser supply see service manual C.D.M.-1.

Adjusting the laser supply

Play track 1 of test disc 4822 397 300096 (disc without defects).
Connect a DC voltmeter across resistor R309 on the servo PCB (= on emitter of transistor Q315 and ground).
Adjust the laser power supply with resistor 3180 until the voltage across resistor R309 is 575 ± 75 mV.

Adjusting the focus bandwidth

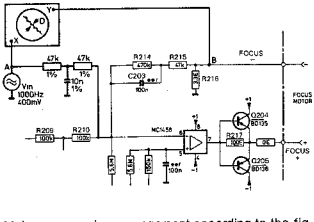

Make a measuring arrangement according to the figure.
Play track 1 of test disc 4822 397 30096 (disc without defects).
Adjust trimming resistor 3158 on PRE. AMPL. + LASER PCB for a 180° phase difference between signals A and B. This corresponds with a minimum distance D in the Lissajous pattern.

R=47 kΩ - 1% 5322 116 54671
C=10 nF -1% 5322 121 54154

Check of the AGC and offset circuits

(See SERVO PCB)
Play track 1 of test disc 4822 397 80096 (Disc without defects).
The voltage between pin 7 of IC Q303 (4/4) and ⊥ should be -4 V ± 2 V.
The voltage between pin 8 of IC Q302 (2/4) and ⊥ should be 0 V ± 2 V.

INITIATION OF THE SERVICING PROGRAMME OF THE μP

— Servicing position "0"

Simultaneously depress the STOP, PLAY and SEARCH ▷▷ buttons. Keep these three buttons depressed while the mains voltage is switched on.

This is the STAND-BY mode, "0" appears on the display.

In this state it is possible to move the arm by means of the SEARCH FORW and SEARCH REV keys with a minimum torque to the outside and the inside resp.
This enables a check of the free motion of the arm across the disc.

— Servicing position "1"

From servicing position "0" the player can be brought in servicing position "1" by depressing the NEXT key.

In this state the laser emits light and the objective starts to focus. When the focal point has been reached, "1" appears on the display.

When **no** disc has been inserted the objective goes 16 x to and fro. Then the player reassumes servicing position "0".

As in servicing position "0" the arm can be moved across the diameter of the disc by means of the SEARCH FORW and SEARCH REV keys.

— Servicing position "2"

To be reached by depressing the NEXT key after servicing position "1" has been reached.

The turntable motor starts to run

On the display appears "2".

In preparation of the transition to servicing position "3" the arm is sent to the centre of the disc.

— Servicing position "3"

To be reached by depressing the NEXT key after servicing position "2" has been reached.

The radial control is switched on. The subcode information is ignored. $\overline{\text{MUSB}}$ is high so that the music information **is released.**

On the display appears "3".

(Dependent on the length of the lead-in track music will be reproduced after approx 1 min.)

In this state it is possible to move the arm by means of the SEARCH FORW and the SEARCH REV keys to the outside and to the inside resp. Now the motion is controlled by the μ and the arm moves by steps of 64 tracks as long as the key is depressed.

If one of the servicing positions 1, 2 or 3 is disturbed (e.g. braking or removing the disc) the player reassumes servicing position "0".

The servicing programme can be left by switching the mains switch (POWER ON/OFF) off and on. (Hardware reset).

FAULTFINDING METHOD

Preface

In course of the development of the troubleshooting guide for the Compact Disc it has become clear that a different approach from the one applied so far was required.
For, it is no longer possible to use the classic strategy, i.e. basing the troubleshooting method on a number of possible faults in the unit.
Practice has shown that a certain fault, with the associated symptom, can have a wide variety of causes. The reason is that this player incorporates a number of feedback loop configurations—which, moreover, might affect each other—and this impedes the obvious measurements.

The method below divides the player from diagram point of view into nine clearly distinguishable subgroups and by performing some measurements, the sub-group being in failure can be isolated. Later the defective circuit can be further examined according to the method given.

PRACTICAL HINTS

Test discs

It is important to handle the test discs with great care. For, the troubles (black dots, fingerprints, etc.) are exclusively and unambiguously positioned.
Damage can cause additional drop-outs etc. and as a result the conscious fault on this disc is no longer exclusive.
In that case it is no longer possible to check e.g. whether the track detector is working correctly.

Measurements on op-amps

In the electronic circuits of the servo systems op-amps are frequently being applied. These op-amps can be used as amplifiers, as filters, as investors, as buffers, etc.

In those cases where feedback is applied in one way or the other, the voltage difference at the differential inputs inclines to zero. This applies both to DC and to AC.
The cause can be traced back to the properties of an ideal op-amp ($Z_I=\infty$; $G=\infty$; $Z_o=0$).
In practice this means that it is nearly impossible to perform measurements on the inverting and non-inverting inputs of op-amps if one input is directly connected to ground.
In those cases only the output signal will be measurable.

That is why in most cases no AC voltages can be given to the inputs.
The DC voltages at the inputs are equal.

Stimulating with "0" and "1"

In the troubleshooting method certain pins should in a number of cases be connected to ground or be connected to the power supply voltage.
This way of acting offers the possibility to overrule certain circuits and to stimulate others.
In this way the diagnose time can be reduced.

In a number of cases the relevant pins appear to be **op-amp outputs**.

In this respect it should be mentioned that the outputs of the used op-amps are short-circuit protected.
This implies that the output of an op-amp can be made low (= usually ground potential) without consequences.
On the other hand should be pointed out that it is **not allowed** to connect the output of an op-amp directly to the **power supply voltage**.

I/Os of microprocessors should not be connected directly to power supply voltage.
These I/Os are allowed to be brought to "0" in case this is mentioned explicitly.

Selection of ground point

It is very important to select a ground point as close as possible to the test point.

Conditions for injecting

- It is should be pointed out that injection of levels or signals from a strange source is **never** allowed to occur when the power supply voltage is lacking in the circuit in question.
- Naturally, the injected level is never allowed to exceed the power supply voltage of the circuit in question.

Continuous burning of the laser

- Disconnect plug J203 on the servo PCB and connect pin J203-9 (laser) of the cable connector to ground.
  Now the focus loop and the radial loop are interrupted as well:
  J203-7 (RE1 = Radial Error 1), J203-8 (RE2 = Radial Error 2) and J203-10 (FE = Focus Error).
  The laser also burns continuously when the set is in service loop 2.

Irregular working of the display

Irregular working of the display when the set is opened and playing, might have been caused by incidental body effect in the region of the crystal oscillators.
Switching "off" and "on" of the mains voltage will eliminate this effect.

Indication of checkpoint

In the circuit diagram the checkpoints have been given a serial number (e.g. ⟨12⟩), to which the troubleshooting method will refer.
For oscilliograms, amplitudes, time bases and position of set, see tables of checkpoints.

GENERAL CHECKPOINTS

In the detailed troubleshooting method following below a number of general conditions, required for proper functioning of the player, will **not** be repeated.
Before starting the detailed troubleshooting method these general points should be checked.

a. Ensure that disc and objective are clean (remove dust, fingerprints, etc.) and use undamaged discs.
b. Convince yourself of the presence of the clock frequencies, viz.:
   - 12 MHz for μP servo (pin 18)
   - 11.2896 MHz for FILTER-B IC (pin 19)
   - 2.82-5.64 MHz for free-running PLL circuit on the DECODER-A IC (pin 27)
   - 3 MHz for control and display μP (pin 33).
c. Check whether all power supply voltages are present and have the correct level.
   See PCB drawings.
d. Check whether the two mutes (KILL and $\overline{MUSB}$ are inactive so that data are nowhere interrupted.
   This should go high about 2 seconds after the mains voltage is switched on.
   $\overline{MUSB}$=pin 23 of the FILTER-B IC on the decoder PCB.
   Normally this pin is high during play and low during search.

DETAILED TROUBLESHOOTING METHOD

A number of quick and efficient checks immediately give a definite answer on poorly functioning sections of the player.
To check the servo systems four service loops have been built in μP Q271.
Before calling in service loops, it should be checked (position power on) whether the bus (clock, data: pin 17 and 10 or 11 of μP Q271 resp.) is free. In other words, checking whether these lines do not have a short circuit to ground or supply voltage (level low or "high"). In such a case the buttons cannot be operated.
For troubleshooting the step-by-step method below is followed.

First step (with disc on turntable)

Bring the player in service loop 1 or 2

If one of the conditions for service loop 1 or 2 is not met, the questions below should be answered positively **in the sequence given**.

In practice this means that when one question has been answered positively, all the preceding circuits, to which the questions refer, are functioning well.

Example: if the eye pattern is present, we may conclude that the laser is working, the laser is in focus and that the turntable motor is running.

Note:
In some situations, certain faults in the radial servo circuit affect the focus servo circuit (e.g. if supply voltage + 1 of IC Q301 in the radial circuit fails, the focus coil starts oscillating).
To determine if this situation exists, connect point ⟨36⟩ on the servo PCB to ground.
In this way, the influence of the radial servo circuit on the focus servo circuit can be eliminated.

A. Is the laser giving light?
   (Test method: see sub A)

B. Is the angle disc-light pin within the tolerance, i.e. 90°± 0.5°?
   (Test method: see description mentioned in chapter "Mechanical measurements and adjustments" of the C.D.M. manual).

C. Is the laser giving sufficient light?
   (Test method: see sub C).

D. Does the objective come in focus?
   (Test method: see sub D).

E. Is the turntable motor running and, if so, is it running at the correct speed?
   (Test method: see sub E).

If the answers to questions 1 or 2 through E are positive, it should be possible to bring the player in service loop 1 or 2.

Second step (with disc on turntable)

Bring the player in service loop 3.

This means that the eye pattern on point ⟨65⟩ (on the decoder PCB has to be stable, while MSC on point ⟨1⟩ on the servo PCB has to be more stable too).
(Test method: see DECODER-A IC)

Note that the set is not only tracking a song in loop 3, but also playing the song, provided the digital circuit is working (however music cannot be hard).

If this does not work, return to service loop 2 and answer the questions below positively in the sequence given.

F. Are $\overline{DO}$ and HFL detectors functioning?
   (test method: see sub F)

G. Is track detector functioning?
   (test method: see sub G)

H. Is the radial control functioning properly?
(test method: see sub H)

If the answers to questions F, G and H are positive, it should be possible to bring the player in service loop 3.

Third step (with disc on turntable)

Note that the set is not only tracking a song in loop 3, but also playing the song, provided the digital circuit is working (music cannot be heard).

If this does not work, return to service loop 3 and answer the question below positively.

I. Is $\overline{TL}$ functioning, i.e. polarity of RE?
(test method: see sub I)

J. Is information transmission subcode functioning?
(test method: see DECODER-AIC)

Check the Q-channel signals.

If the answers to questions I and J are positive, it should be possible to bring the player in the Play mode.

Fourth step (with disc on turntable)

If no music is heard in position "play" or service loop 3 answer the last question.

K. Is digital decoder circuit functioning according to specification (test method: see II. FILTER-B IC and V. KILL CIRCUIT)

Sub. A. IS THE LASER GIVING LIGHT?

Test method

Bring the player in service loop 1 without placing a disc on the turntable. Now the laser is giving light for an unlimited period of time.

Another method for which the laser gives light during an unlimited period of time and the objective is standing still, is disconnecting plug J203 on the servo PCB and connecting point J203-9 of the cable connector to ground.
In case of power-on the laser should burn. This is checked with the aid of a light-sensitive component which is slightly screened from ambient light.

Hereafter follow some examples:

a. Connect photosensitive diode type BPW4, code number 4822 12032108, with correct polarity to an analogue multimeter (e.g. PM2412) at range 10 kΩ.
If the laser is burning, the meter will give virtually full scale deflection.

b. Connect LDR, code number 4822 116 10002, to digital multimeter PM2517E.
If the laser is burning, the resistance will drop to approx. 8 kΩ.

If the laser is not giving any light, proceed to Annex 1.

Sub. C. IS THE LASER GIVING SUFFICIENT LIGHT?

Test method (Test points on Pre-amp PCB)

— interrupt the collector of Q203 on the servo PCB or ground the-side of electrolytic capacitor C201. Disconnect plug J203 on the servo PCB and connect pin **J203-9 (laser)** of the cable connector to ground.
Now the laser should continue to give light while FE, RE1 and RE2 are interrupted.
— Place disc on turntable and switch power on.
— Directly inject with AF generator ($Z_i \leq 600$ Ohms) to test point ⟨1⟩ FE a sine-wave signal between 25 and 60 Hz (exact frequency is player-dependent) and $2V_{pp}$.
— Select such a frequency that the monitor diodes of the light pin give output signals as indicated on test points ⟨5⟩, ⟨6⟩, ⟨7⟩ and ⟨8⟩. Amplitude 40–80 mV.
— If the amplitude is not sufficient, proceed to Annex 1.

Sub. D. IS THE OBJECTIVE COMING INTO FOCUS?

Test method

- **No disc on turntable**

Switch power on and actuate Play button.
Now the arm should move inwards. Immediately after that the objective should move two times up-and downwards (this happens during searching of the focusing point).
After this the action will stop.
These actions are software-controlled from the servo μP. If this is not working, check μP servo, end stage focus circuit or focus coil.

- **With disc on turntable**

Quick test procedure:

For a rough check on the working of the focus circuit, proceed as follows:
— place disc on turntable.
— set player in service loop 1.
— remove disc from turntable.
— now examinate if the objective focuses by bringing a reflective object (e.g. mirror) above it.

Detailed test procedure

— Check **Q203** (on servo PCB) as follows:
Check whether FN becomes, with each passage of the nominal focusing **low for a short period of time**. Only when focusing point FN has been found, FE will be released via Q203 (base will become negative).
Check whether base of Q202 is driven low from servo μP (= $\overline{FCO}$). If not, check servo μP.
If so, proceed.

— Test focusing circuit as follows:
Interrupt the collector of Q203 on the servo PCB and disconnect **plug J203** on the servo PCB. Con-

nect pin **J203-9 (laser)** of the cable connector to ground.
Now the laser is burning continuously, FE has been released and the focus loop has been interrupted at test point ⟨1⟩ (=FE) on servo PCB.

Testing of circuit, between test point ⟨1⟩ and focusing coil
(Test points on servo PCB)

- Directly inject a sine-wave signal of 10 Hz, $2V_{pp}$, to test point ⟨1⟩ by means of an AF generator ($Z_i \leq 600\ \Omega$).
- Check visually whether focusing coil "--" and thus objective too "--" responds.
- Check whether this voltage is 0.6 V_{pp} on test point ⟨2⟩.
- Check whether this voltage is 6 V_{pp} on test point ⟨3⟩.
- Check whether this voltage is 5 V_{pp} on test point ⟨4⟩.

Testing the subchassis (Test points on Pre Amp PCB, injection point on servo PCB)

- Place a disc on the turntable.
- Directly inject to test point ⟨1⟩ a sine-wave signal between 25 Hz and 60 Hz at 2 V_{pp} by means of an AF generator ($Z_i \leq 600\ \Omega$). The exact frequency is player-dependent.
- Select such a frequency that the monitor diodes of the light pin give output signals as indicated on test points ⟨5⟩, ⟨6⟩, ⟨7⟩ and ⟨8⟩.
- Check test points ⟨9⟩, ⟨10⟩, ⟨11⟩ and ⟨12⟩.
- Check test point ⟨13⟩.
- Check test point ⟨14⟩.

  Is the same as signal on test point ⟨13⟩ but amplitude is dependent on position of potentiometer 3138.

If all the checks are positive, close focus loop (insert plug J203). Now the focusing circuit should be able to operate. Reconnect transistor Q203.
It should be noted here that the amplitudes on test points ⟨5⟩ through ⟨13⟩ are slightly dependent on the characteristic of the monitor diodes.

Sub. E. IS TURNTABLE MOTOR RUNNING AND, IF SO, IS IT RUNNING AT THE CORRECT SPEED?

Test method (Test points on servo PCB)

- Place disc on turntable and bring set in service loop 2.
- If focusing point is found, check whether $\overline{FCO}$ is low on point ⟨15⟩.
  If not, check focus circuit sub D.
  If so, proceed.
- Now only power on, disconnect plug J201 on the servo PCB and check MSC=point ⟨12⟩ of cable connector J201 or point ⟨6⟩ on the decoder PCB.
  If not, check Decoder-A IC (Q501) circuit.
  If so, proceed.
- Reconnect plug J201, disconnect plug 15 on the preamplifier PCB and inject a DC signal to the cable connector of the motor or directly to the turntable motor.
  The turntable motor should be running now.
  (A DC voltage of 2,5 V approximately corresponds with the rpm during scanning of the innermost tracks).
  In this condition the player should be brought in service loop 2 (depress Stop button while mains voltage is switched on).
  If DC < 2.5 V Figure G should be visible on test point ⟨17⟩ (servo PCB).
  If DC > 2.5 V Figure H should be visible on test point ⟨17⟩.

If so, check turntable control circuit (circuit from point ⟨17⟩ to turntable motor).
If not, check whether MSC is released by means of $\overline{SSM}$ at pin 16 of IC Q271.
This connecting plug J201 on the servo PCB and measure on pin 12 of cable connector J201.
If MSC is working now, check circuit around IC Q271.

- Take player out of service loop 2, depress Power-on button and then Play button and check eye pattern on point ⟨6⟩ (on decoder PCB).
  To stabilize the eye pattern, bring light pin above tracks by hand, or by briefly (5 s) depressing Fast Forward button.
  If eye pattern not point ⟨6⟩ is not present or unstable, check RF pre amplifier (see Annex IV).
- If eye pattern is correct, proceed.
- Check whether point ⟨5⟩ (=$\overline{HFLS}$) on the servo PCB is correct in service loop 2 (see Figure Y). If not, check $\overline{HFLS}$ detector circuit (is circuit between point ⟨6⟩ and ⟨5⟩). If so, proceed.
  Take player out of service loop 2 by depressing the power button.
- Check locking-in of PLL circuit of Decoder-A IC.
  (See CEFM signal pin 27: point ⟨6⟩)
  If PLL is locking-in, proceed.
- Check timing signals on output of Decoder-A IC as indicated in "DECODER-A IC".
  Is the digital decoder circuit functioning according to specification? If timing signals are correct, proceed.
- If MSC is still not functioning properly, replace the relevant specific digital IC according to the trial and error method with the aid of service IC box.
- MSC has to be present now.

Sub. F. ARE THE $\overline{DO}$ and $\overline{HFLS}$ DETECTORS FUNCTIONING?

Test method (Test points on servo PCB)

— Starting point is:
$\overline{HFLS}$ = 1 when spot is exactly on track
$\overline{HFLS}$ = 0 between tracks (e.g. during track jumping)
$\overline{DO}$ = 0, or DO = 1 in case of drop-out
$\overline{DO}$ = 1, or DO = 0 when there is no drop-out.

Approximative method
(applicable in service loop 2)

— Place disc on turntable.
— Bring player in service loop 2.
— Check whether DO (test point ⟨57⟩ is not continuously "high". Normally test point ⟨57⟩ is "low", however small spikes of approximately 100mV are present in case of scratches on the disc.
— Check $\overline{HFLS}$ (test point ⟨55⟩).

Precise method
(can be checked in playing set only)

— Place test disc 5A on turntable. Switch power on and depress Play button.
— Select track no. 10: Check point ⟨55⟩.
$\overline{HFLS}$ pulses should be present.
— Select track no. 15: Check point ⟨56⟩.
$\overline{DO}$ pulses should be present. With this track the $\overline{HFLS}$ pulses on point ⟨55⟩ should also be present.
— In case of track jumping $\overline{HFLS}$ pulses are always present on point ⟨55⟩.

Sub. G. IS TRACK DETECTOR FUNCTIONING WELL?

Test method (Test points on servo PCB)

Switch off the offset circuit:
Loosen resistor 3315 (at the side where it is in contact with pin 8 of IC Q302).
Mount a 47 kΩ trimming potentiometer between +1 and −1 supply voltage (for example between pins 4 and 11 of IC Q302). Connect the wiper of the trimming potentiometer to the loose side of resistor 3315.

— Place a disc on the turntable.
— Bring the set in service loop 2.
— Adjust the signal on test point ⟨21⟩ symmetrically round 0V by means of the external 47 kΩ trimming potentiometer. The amplitude of the signal may change during this adjustment.
— Measure F.S on point ⟨28⟩.
Here too the frequency variation depends on the eccentricity of the disc.
— Check point ⟨60⟩.
— Check point ⟨61⟩. Signal cannot be triggered.
— Check point ⟨62⟩.
— Switch the offset circuit on again.

Sub. H. IS THE RADIAL CONTROL FUNCTIONING PROPERLY?

Attention: The offset circuit (d-multipuller) and the AGC circuit (k-multiplier) are correction circuits. This means that under optimal conditions (new disc, minimum tolerances of components) the set may be working properly even if a fault is preset in offset or AGC circuit.

Test method (Testpoints on servo PCB)

a. Place disc on turntable.
b. Switch off AGC circuit (k-multiplier) and switch off offset circuit (d-multiplier).

Method:
Switching off AGC circuit: interconnect points ⟨5⟩ and ⟨6⟩ of IC Q309.

— Place a disc on the turntable.
— Bring the set in service loop 2.
— Adjust the signal on test point ⟨21⟩ symmetrically round 0V by means of the external 47 kΩ trimming pot. The amplitude of the signal may change during this adjustment.

c. Bring set in service loop 3.
At this moment there is a high probability that the set is working.
If so, check d and k factor (see Annexes II and III).

If not, proceed.

d. Bring set in service loop 2 and check signal on point ⟨21⟩.
The AC-component has to be 12-14 V symmetrically, around a DC level of zero volt.
If this is correct, proceed to e).
If this is not correct check following testpoints
⟨22⟩, ⟨23⟩: value should be 0.7 V_{pp}
⟨24⟩: value should be 0.2 V_{pp}
⟨25⟩: value should be 0.25 V_{pp}
⟨26⟩: value should be 20 mV_{pp}
⟨27⟩, ⟨28⟩: value should be 800 mV_{pp}

Note:
The frequency variation strongly depends on the eccentricity of the disc.
If points ⟨22⟩ ÷ ⟨28⟩ are OK, check point ⟨21⟩ again.
If ⟨21⟩ is OK, proceed.

e. Check point ⟨28⟩ (is RE + 650 Hz).
Value should be Vpp If so, proceed.
When the set is in the normal stand-by position 650 Hz at 300 mV is present on point ⟨28⟩.

f. To check radial output stage, do not use a disc, only power on. Inject on points ⟨59⟩ and ⟨31⟩ respectively a sine-wave signal of 8 to 10 Hz 3 Vpp.
Then the radial motor will go back and forth.

At this moment radial tracking must be possible in service loop 3.
— Switch the AGC circuit on again.
If the original fault symptom is still present proceed

to Annex III:
Check of the k-factor.
— Switch the offset circuit on again.
If the original fault symptom is still present, proceed to Annex II:
Check of the d-factor.

Sub. L IS $\overline{\text{INT}}$ FUNCTIONING. O.E. POLARIOTY OF RE? (Measure points on servo PCB)

Test method
Bring player in service loop 3 and measure $\overline{\text{INT}}$ on pin 12 of μP servo IC Q271.
A square-wave voltage (0-5V) should be measured on th is pin. As a result of the frequency variation th is square-wave is hard to trigger.

I DECODER-A IC

- **Check the MC signal (pin 17; test point ⑥)**

— In stand-by mode, the MC signal (Motor Control) corresponds to the figure below.

Note:
The repetition time of the MC signals is 11.3 μsec.

— Place a disc on the turntable.
— In position PLAY or SERVICE POSITION 3, the MC signal corresponds to the figure below.

Note:
During start-up the duty cycle is 98%, then the duty cycle of the signal becomes about 50%.

See also Service Manual CDM-1: "Check of the motor control".

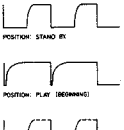

- **Check the HF signal on test point ⑧ (eye pattern)**

— Place a disc on the turntable.
— The HF signal should be present and be stable in the PLAY mode and in:
SERVICING POSITION 3 after the run-in track has been read.
— In SERVICING POSITION 2 and during reading of the lead-in track the HF signal is not stable.

Position of oscilloscope 0.5 μs/DIV.

Amplitude ≈ 1.5 V_{pp}

- **Check the $\overline{\text{HFLD}}$ signal on test point ⑩**

— Place a disc on the turntable.
— In the PLAY mode and in SERVICING POSITION 3 the $\overline{\text{HFLD}}$ signal is "high"; however, minor pulses may be present and in cause of disorders on the disc.
— In SERVICING POSITION 2 and during playback of track no. 15 of test disc 5A $\overline{\text{HFLD}}$ pulses are visible.

Position of the oscilloscope 5 ms/DIV

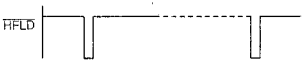

- **Check if the $\overline{\text{MUTE}}$ signal (pin 11; test point ⑦) is "high"**
When Filter-B IC is applied, the $\overline{\text{MUTE}}$ input will not be used.

- **Check the CEFM signal (pin 27; test point ⑨)**

— Place a disc on thr turntable.
— In stand-by mode (only the main s switch is depressed), the frequency lies between 2.82 MHz and 5.64 MHz.
— In the position PLAY and SERVICE POSITIONS 2 and 3, the frequency is 4.32 MHz.

- **Check the Xin signal (pin 19; test point ⑤)**

— The Xin frequency is 11.2896 MHz.
— If this frequency deviates, check test point 70; Xout signal, on Filter-B IC.
This frequency should also be 11.2896 MHz.

- **Check the timing signals meant for Filter-B IC**

— Place a disc on the turntable.
— Select one of the following positions:
SERVICE POSITION 2 or 3, or position PLAY.
— Trigger the oscilloscope with the WSAB signal (test point ①, pin 39).
— Check signals:
WSAB at test point ① (pin 39)
(Word Select from Decoder-A to Filter-B)
CLAB at test point ② (pin 38)
(Clock from Decoder-A to Filter-B)
and their interrelation.
— There must be activity at test point ③ (pin 37), DAAB signal (DATA from Decoder-A to Filter-B).

- **Check the EFAB signal (Error Flag from Decoder-A to Filter-B) at test point ⑦ (pin 36)**

— Place test disc 5A on the turntable.
— During playback, EFAB fulses should be present at test point ⑦ for soft braking of the disc and during fast search (F.Forward, F.Reverse).

Note:
Filter-B IC is capable of interpolating linearly 8 successive EFAB pulses.

- **Check the Q-channel signals**

— Place a disc on the turntable.
— Select one of the following positions:
SERVICE POSITION 3 or position PLAY.
— Trigger on the QRA signal (Q-channel Request Acknowledge) test point ⑦; pin 30.
— Check signals QRA at test point ⑦ (pin 30).
QCL at test point ⑦ (pin 31).
(Q-channel-clock)
and their interrelation.
— There should then be activity at test point ⑦ (pin 29) QDA (Q-channel Data).

Note:
The QRA request is initiated by decoder μP (QRA "high"). Then Decoder-A answers this request (QRA goes "low"). With the next leading clock pulse (QCL) the QRA signal is rendered "high" again by the decoder μP.
As soon as the decoder μP has taken in enough information via QDA, QRA will go low again. That is why the QRA times vary each time.

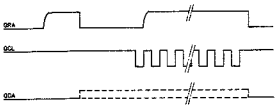

- **Check the $\overline{SSM}$ signal (test point ⑦; pin 33) = Start-Stop turntable motor**

— Motor start pulse when test point ⑦ is "high" for ≥ 0.2 sec.
— Motor start pulse when test point ⑦ is "low" for ≥ 0.2 sec.

Note:
After the motor start pulse, SWAB information (Subcoding Word clock) will become visible at this point. The period time of that signals is 136 μsec.

- **Check the subcode clock signals**

— Place a disc on the turntable.
— Select one of the following positions: SERVICE POSITION 3 or position PLAY.
— Trigger the oscilloscope with the SWAB signal at test point ⑦.
— Check the following signals:
SWAB at test point ⑦; pin 33
SCAB at test point ⑦; pin 35 (Subcode Clock from Decoder-A to Filter B)
SDAB at test point ⑦; pin 34 (Subcode Data from Decoder-A to Filter B)
and their interrelations.

Note:
While the burst of 10 clock pulses, appear on SCAB the Q-channel information is transferred on SDAB. Hereafter the P-bit indication follows.
The P-bit "high" between two bursts of 10 clock pulses in case of pause indication and "low" in case of music indication.

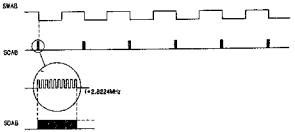

- **Check the $\overline{CRI}$ signal**

The $\overline{CRI}$ is "low" in case of track jumping.
Player in position SEARCH.

- **Check the $\overline{DEEM}$ signal (test point ⑦; pin 32)**

— Place test disc 5 on the turntable.
— During playback of track no. 14 (recorded without PRE-EMPHASIS), the $\overline{DEEM}$ signal should be "low".
— During playback of track no. 15 (recorded with PRE-EMPHASIS), the $\overline{DEEM}$ signal should be "high".

II FILTER-B IC

- **Check the signals between Decoder-A IC and Filter-B IC**

See sub. "I Decoder-A IC".
— Check the X IN signal (test points 68 and 70)
— Check the timing signals meant for Filter B (WSAB, CLAB, DAAB signals; test points 71, 72 and 73).
— Check the EFAB signal (test point 74)
— Check the subcode clock signals (SWAB, SCAB, SDAB signals; test points 76, 78 and 80).

- **Check the timing signals between Filter-B IC and DAC IC**

— Place disc on the turntable.
— Select one of the following positions:
SERVICE POSITION 3 or position PLAY.
— Trigger the oscilloscope with the WSBD signal (Word Select from Filter B to DAC) test point 65 (pin 18).
Check the following signals:
WSBD at test point 65; pin 18
CLBD at test point 67; pin 16 (Clock signal from Filter B to DAC) and their interrelation.
If an Audio disc is used, there should be activity at test point 66 (pin 15) DABD signal (DATA from Filter B to DAC). If a disc with Digital Data (CD-ROM) is used, this point is continuously switched "low" by transistor Q537. In that case the word "data" appears on the display.

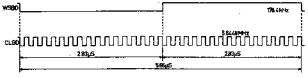

- **Check the DOBM signal (Digital Output)**

— Place a disc on the turntable.
— Select the stand-by mode (only mains switch depressed).
— Trigger the oscilloscope with the SWAB signal (test point 78).
— Check the DOBM signal (test point 69; pin 14).
An empty audio signal has a fixed pattern.
See drawing, "Stand-by".
— Select the PLAY mode.
Check the DOBM signal. See drawing "PLAY".

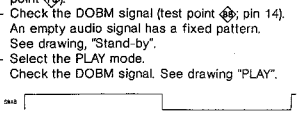

- **In position SEARCH the $\overline{\text{ATSB}}$ signal is "low" test point 88; pin 22 (Attenuation Audio Signal)**

— When the "µP panel" is applied, (a sub-printed circuit board) that houses IC Q271, test point 88 is not connected.

- **Check the $\overline{\text{MUSB}}$ signal test point 90; pin 23 (Soft Mute)**
This signal is "low" in positions:
PAUSE
NEXT or PREVIOUS when jumping form one track to another.
Fast SEARCH when the Search button is kept depressed for some time.

III DAC IC (Dual Digital Analog Converter)

- **Check the signals between Filter-B IC and DAC IC**

See sub. "II Filter-B IC":
— Check the timing signals between Filter-B IC and DAC IC.

- **Check the output of the OP-AMP after the DAC IC**

— Place a disc on the turntable.
— In position PLAY or in SERVICE POSITION 3, the analog (music) signal should be present at the output of the OP-AMP, after the lead-in track has been read.

IV $\overline{\text{DEEM}}$ CIRCUIT

- **Check $\overline{\text{DEEM}}$ circuit**

— Place test disc 5 on the turntable.
— During playback of track no. 14 (recorded without PRE-EMPHASIS) the $\overline{\text{DEEM}}$ signal at test point 84 should be "low".
— During playback of track no. 15 (recorded with PRE-EMPHASIS), the $\overline{\text{DEEM}}$ signal at test point 84 should be "high".
— During playback of track no. 14 the analogue signal should be present at the source of R564 (test point 91) and R565 (test point 92).
— During playback of track no. 15 the analog signal at the source of R564 (test point 91) and R565 (test point 92) should be 0 V..

V KILL CIRCUITL

— During switching on and off the mains voltage the signal on the collector of QN01 and QN02 should be as indicated in the figure below.

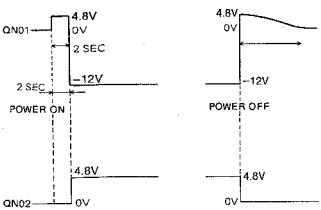

VI FAVOURITE TRACK SELECT (FTS)

Attention:
When repairing a CD player it is important that the cxontents of the FTS memory (EEPROM) should not unnecessarily be damaged.
If no complaints are reported about the functioning of the FTS, a check of the functions of the EEPROM should be left undone.
The EEPROM IC is in the Stand-by mode when $\overline{CE}$ and RDY are both high.

Selftest of the FTS μP

During the self-test of the FTS μP, I/O Gate will not be tested.
Therefore this self-test can be executed without damage to the memory as indicated in General Test Points.

Annex I: LASER IS GIVING NO OR INSUFFICIENT LIGHT

Together with laser supply and the monitor diode the laser forms a feedback system.
A defect in the laser supply might thus result in destruction of the laser. Replacement of th laser (=new light pin) will not solve anything. The new laser will also be destroyed since the original fault in the laser supply is still present.

On the other hand it is impossible to check and repair a feedback system when one link is missing.

For this reason the so-called laser simulator 3 is supplied. Code number 4822 395 30229.
This laser simulator consists of a PCB which contains the laser and monitor simulation, a switch to test the On/Off position and a number of sockets.

This PCB can be connected to the laser supply instead of the light pin so that the feedback system is closed.

Repair procedure:

Since the light pin is very sensitive to static charges, care should be taken that during measurements and adjustments of the laser power supply the potential of the aids and yourself equal the potential of the CD mechanism.

Detach light pin an connect laser simulator as follows: (connections on pre-amp PCB).
Take the flex PCB out of socket 11 and connect the simulator PCB with the socket.
Remove plug 16 and insert it in the socket on the simulator PCB.
Connect the plug with 4 wires to socket 16. Take out plug 17 and insert the plug with 1 wire in socket 17.

— Switch on the mains switch and ensure that the drawer is closed or else that the tray-end-in switch on the tray PCB (S004) is depressed.
Now press the play key and check if the L-line of the servo μP, pin 21-2 on the pre-amplifier PCB, goes "low".

— In rest position the current through the laser diode should be ≤ 1 mA. For NEG. VOLT. lasers this can be checked as follows:
Set the switch on the simulator PCB in the OFF position and the mains switch in the ON position.
Turn trimming resistor 3180 counterclockwise (min. R) and measure the voltage across resistor 3194 on the pre-amp. PCB.
On pre-amplifier PCBs with discrete components turn resistor 3180 clockwise (min. R) and measure the voltage across resistor 3194.
The voltage should be ≤ 15 V.

Check of laser supply control

Set the switch on the simulator PCB in the ON position and measure the voltages between points +V and=V on the simulator PCB.
Resistor 3180 clockwise (max. R): U_{+V-V}=225 mV ±45 mV. On pre-amplifier PCBs with discrete components resistor 3180 counterclockwise (max. R): U_{+V-V}=225 mV ±45 mV.

R3180 counterclockwise (min. R): U_{+V-V}=750 mV ± 150 mV.
On preamplifier PCBs with discrete components resistor 3180 clockwise (min. R): U_{+V-V}=750 mV ±150 mV.

Set resistor 3180 in the mid-position.
This is a preliminary adjustment. After the simulator PCB has been removed the laser current must be adjusted.

Fine adjustment of laser current

— Playback track 1 of test disc 4822 397 30096 (Disc without defects). Connect a DC voltmeter across resistor 3308 on the SERVO PCB circuit

diagram D. Adjust the laser power supply with resistor 3308 is 575 mV ± 50 mV.

Annex II: **CHECKING d-FACTOR**
(Test points on servo PCB)

— Switch off AGC circuit (k-multiplier) and switch off offset circuit (d-multiplier). See sub G and H.

Place disc on turntable and set player in service loop 2.

— Check points 22 and 23.
Value should be o.7 V_{pp}.
Frequency variation strongly depends on the eccentricity of the disc.
— Check points 29.
Value should be 250 mV_{pp}.
— Check point 35.
Value should be 200 mV_{pp}.
— Check point 36.
Value should be 2 V_{pp}.
— Check points 37 and 38.
Value should be 10 V_{pp}.
The signals is more sine-shaped now due to filtering out of 650 Hz.
— Point 39 is hard to measure since switch is in position Yoc and thus connected with input of op-amp Q302 (pin 9).
However, a signal of 200 mVpp is present.
— Check point 40.
Value should be 9 V_{pp}.
Bring the player in service loop 3. With a disc on turntable and the AGC and offset-circuits are still switched off.
— Check point 41.
— Check point 40 on beam A of oscilloscope and check point 39 on beam B of oscilloscope while oscilloscope is triggered with point 41.
— Switch on the AGC-circuit and offset circuit.

Annex III: **CHECKING k-FACTOR**
(Test points on Servo PCB)

a. Static

Switch power on **without** depressing the Play button. I.e. RC0=high; $\overline{RC0}$=low so switch Ya is in position 0 and switch Yc is in position 0.
— Check point 49.
Value should be 9 V_{pp}.
— Check point 46.
— On point 49 now appears a sine-wave signal of 650 Hz, 300 mV, and 180-45=360°shifted in phase relative to signal on point 49.
— Check point 47.
Value should be 1.5 V_{pp}.
— Check point 48.
Value should be 1 V_{pp}.
— Check points 49, 50, 51 and 46 relative to each other.
Amplitudes are 5V.
— Check integrator IC Q303 (4/4)

b. Dynamic

Insert disc, select service loop 2 and check if the signal on point 23 equals to 7 V_{pp}.
— Select service loop 3.
Now $\overline{RC0}$=high and RC0=low.
So switch Y_a is in position1.
Switch Y_c switches at f=650 Hz.
Point 52 is low; so point 51 is in phase point 50.
Now fig. U should be present on point 51 with duly cycle jittering round 50%.

Annex IV: **CHECKING RF PRE-AMPLIFIER**
(measure points on pre-amp. PCB)

a. Check DC-voltages on transistor 6103, 6104, 6105, 6109, 6110, 6111.

b. For checking sensitivity, frequency and delay characteristic, proceed as follows:
— Take flex PCBs of sockets 10 and 11.
— Take plugs 16, 17, 12, 13, 14 and 15 out of sockets.

SERVO

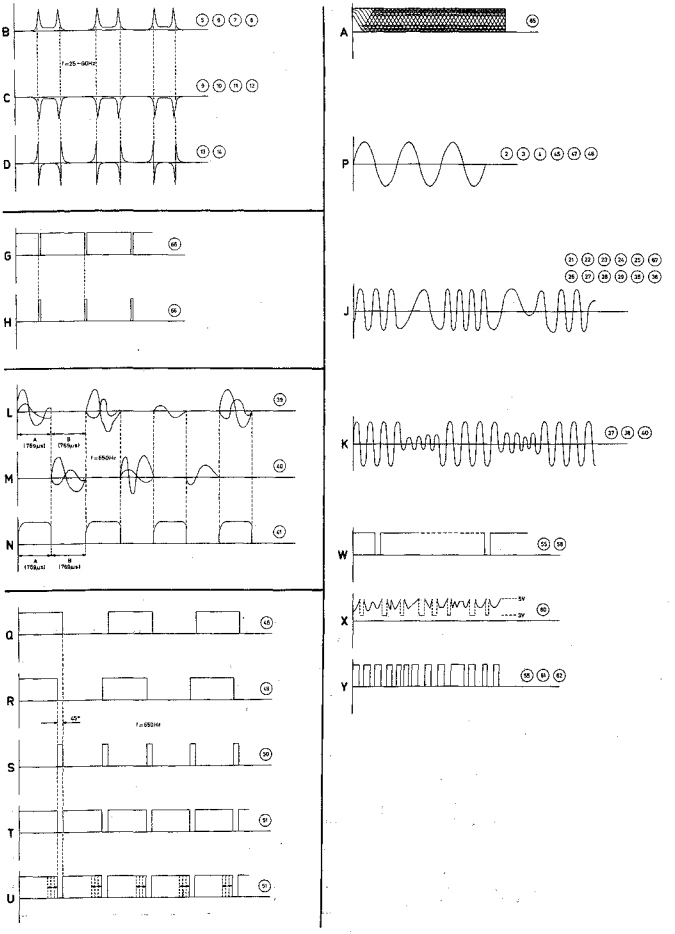

SERVO

Nr.	See	Position	Amplitude	f	Time base
1		see fault finding meth.			
2	P	see fault finding meth.	0,6 Vp-p	10 Hz	
3	P	see fault finding meth.	6 Vp-p	10 Hz	
4	P	see fault finding meth.	5 Vp-p	10 Hz	
5	B	see fault finding meth.	40-80 mV	25-60 Hz	
6	B	see fault finding meth.	40-80 mV	25-60 Hz	
7	B	see fault finding meth.	40-80 mV	25-60 Hz	
8	B	see fault finding meth.	40-80 mV	25-60 Hz	
9	C	see fault finding meth.	—2 V	25-60 Hz	
10	C	see fault finding meth.	—2 V	25-60 Hz	
11	C	see fault finding meth.	—2 V	25-60 Hz	
12	C	see fault finding meth.	—2 V	25-60 Hz	
13	D	see fault finding meth.	—8 V, +8 V	25-60 Hz	
14	D	see fault finding meth.	depends on R3158	25-60 Hz	
15		see fault finding meth.			
20		see fault finding meth.			
21	J	see fault finding meth.	12-14 Vp-p		
22	J	see fault finding meth.	0,7 Vp-p		
23	J	see fault finding meth.	0,7 Vp-P		
24	J	see fault finding meth.	0,2 Vp-p		
25	J	see fault finding meth.	0,25 Vp-p		
26	J	see fault finding meth.	20 mVp-p		
27	J	see fault finding meth.	800 mVp-p		
28	J	see fault finding meth.	800 mVp-p		
29	J	see fault finding meth.	6 Vp-p		
29	P	ON	0.3 Vp-p		
30		see fault finding meth.			
31		see fault finding meth.			
32	*	see fault finding meth.			
33	*	see fault finding meth.			
35	J	see fault finding meth.	200 mVp-p		
36	J	see fault finding meth.	2 Vp-p		
37	K	see fault finding meth.	10 Vp-p		
38	K	see fault finding meth.	10 Vp-p		
39	L	see fault finding meth.	0-4 Vp-p		A = 769 µs B = 769 µs
40	K	see fault finding meth.	9 Vp-p		A = 769 µs B = 769 µs
40	M	see fault finding meth.	0-4 Vp-p		A = 769 µs B = 769 µs
41	N	see fault finding meth.	6 Vp-p		A = 769 µs B = 769 µs
45	P	ON	9 Vp-p	650 Hz	
46	Q	ON	0-5 V	650 Hz	A = 769 µs B = 769 µs
47	P	ON	1,5 Vp-p	650 Hz	
48	P	ON	1 Vp-p	650 Hz	
49	R	ON	0-5 V	650 Hz	
50	S	ON	0-5 V	650 Hz	
51	T	ON	5-0 V	650 Hz	
51	U	service loop B	5 V	650 Hz	
52		see fault finding meth.			
55	Y	service loop A	5-0 V		
55	W	play (with test disc)	5-0 V		
56	W	play (with test disc)	5-0 V		
57		see fault finding meth.			
60	X	service loop A	5-3 V		
61	Y	service loop A	5-0 V		
62	Y	service loop A	5-0 V		
65	A	play	1 Vp-p		
66	G	see fault finding meth.	5-0 V		
66	H	see fault finding meth.	0-5 V		
67	J	see fault finding meth.			

BLOCK DIAGRAM WARDS INFOMATION

DAC0 – DAC3	Control bit for radial circuit
DAC	Cirrent output for track jumping
$\overline{DO}$	Drop out detector signal
D1 – 4	Photodiode Currents
FE	Focus error signal
HF	HF output for DEMOD
$\overline{HFLD}$	HF detector output for DEMOD
MSC	Motor control signal
RE	Radial error signal (Amplified RE2 – RE1 currents)
RE1	Radial error signal 1 (Summation of amplified currents D3 and D4)
RE2	Radial error signal 2 (Summation of amplified currents D1 and D2)
$\overline{TL}$/INT	Track loss signal
Vc	Control voltage for turntable motor
$\overline{ATSB}$	Attenuation of Audio level in search position (cueing)
CEFM	Clock 4.3218 MHz
CLAB	Clock signal Decoder-A to Filter-B
CLBD	Clock signal Filter-B to DAC
CRI	Counter Reset Inhibit
DAAB	Data signal Decoder-A to Filter-B
DABD	Data signal Filter-B to DAC
$\overline{DEEM}$	Deemphasis ON-OFF signal
DOBM	Digital out signal
EFAB	Error flag Decoder-A to Filter-B
IREF	Reference current
$\overline{SSM}$	Motor Start-Stop signal
$\overline{MUTE}$	Mute signal
$\overline{MUSB}$	Soft Mute signal
PD/OC	Phase detector-oscillator control
QCL	Q-channel Clock signal
QDA	Q-channel Data signal
QRA	Q-channel Request Aknowledge
SCAB	Subcode clock Decoder-A to Filtor-B
SDAB	Subcode data Decoder-A to Filter-B
SWAB/$\overline{SSM}$	Subcode Word/Start-Stop Motor signal
WSAB	Word select Decoder-A to Filter-B
WSBD	Word select Filter-B to DAC
XIN	Oscillator signal in Decoder-A
XSYS	Oscillator signal OUT Filter-B
RDIR	Radial current switch control signal Nomal, or Revers
RP	Radial puls after Track Jump
FN	Focus Neutral
ANIN	
$\overline{HFLS}$	HF Loss signal
$\overline{SRDO}$	Signal Radial ON/OFF for Track jump
RCO	Switch Digital to Analogue
FC1, FC2	Focus UP/DOWN signal
$\overline{FCO}$	Focus ON/OFF signal
L	Laser ON/OFF signal
BUSY	μ-COM Communication Clock
RXD	μ-COM Communication Recive Data
TXD	μ-COM Communication Telex Data

Loading Tray Mechanism

Cautions When Servicing

1. Installation of Tray and Tray Case

(Upon replacement of the tray case due to breakage, etc.)

① If the position with respect to the tray's front panel window is incorrect, lossen screws Ⓐ and move the tray within the range of play of the hole to adjust. For the inclination of the tray, refer to diagram below.

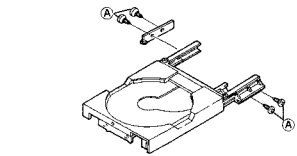

The tray should not be more than 0.4 mm above the rollers on the bottom side.

Adjust the inclination as well with screws Ⓐ.

② The tray's working force should be set to between 200 and 400 gr (when power is off).

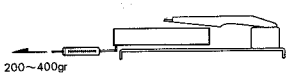

2. If Tray has become detached downward

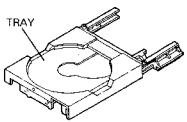

Take care in the following instances as the tray will become detached downward.

- The tray will become detaced if pressed downward with the stopper mechanism removed while the drawer is open.
- The tray will become detaced if pressed downward when there is no subchassis (CDM-1). (The same is true when the tray is closed with no subchassis.)

Use the following procedure to reinstall.

① Lower the lever and place the tray on the projection.

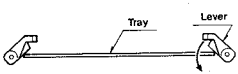

② Next, with the tray pressed down, lower the other lever and place the tray on its projectin.

NOTE:
Be sure to lower only one lever at a time as the tray cannot be lifted if they are both lowered.

NOTE:
If the tray is forced back to its original position, the two pins in the tray case may bend.

3. If Subchassis (CDM-1) has been replaced

① The height of the subchassis turntable differs from one unit to the next, so it is necessary to adjust according to the height of the turntable so that the magnet clamper is not in contact with the clamper fitting. (Standard 2±0.3 mm)

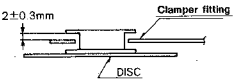

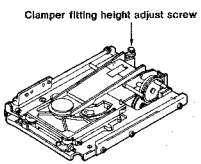

② When the height of the clamper fitting is adjusted, the position when the clamper is up must be readjusted. Use the following procedure.

Disc clamper position — **When up Max. 43 mm (Tray and clamper should not come into contact when try is opened and closed.)**

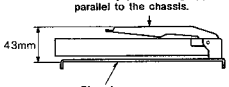

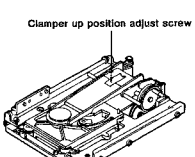

4. Others

① Refer to the diagram below to install the loading wire.

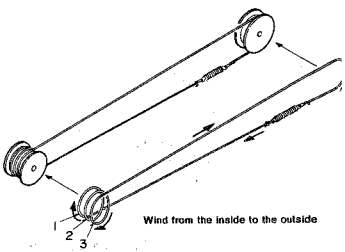

② All switches on the mechanism are of the socket type. If a switch breaks, remove the socket to replace.

③ Use to the structure of the hooks of the magnet clamper (094M), incline as indicated below to remove and install the magnet clamper when replacing it.

CLV CIRCUIT FOR 8 CM SINGLE CD

The outermost portion of a 12 cm disc is shot with light of LED, and whether or not there is reflected light from disc is detected by a phototransistor to determine 12 cm or 8 cm. At the same time, the constant of CLV servo is switched over by operating the FET SW so that it meets the disc.

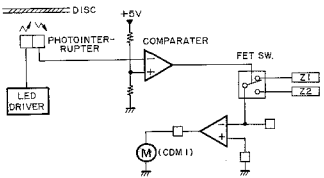

Circuit Operation

	Q403	Q404	Q405	Q406	Servo Constant
12 cm	ON	OFF	ON	OFF	R255-C252, R259-C254
8 cm	OFF	ON	OFF	ON	R296-C526/R295, R298-C259

- **12 cm**

With phototransistor ON, voltage of Q402-1/2 pin 3 drops and quantity of light from LED is reduced. Then, voltage of comparator (Q402-2/2) pin 6 drops, and approx. +10 V voltage is output at pin 7 to turn on Q403/Q405.

- **8 cm**

Operation converse to that of 12 cm is carried out; voltage at pin 7 becomes approx. −10 V to turn on Q404/Q406.

PUSH-PULL SYSTEM

Four DACs are used, two DACs for each channel, to convert 16-bit data into analog signal.
For analog signal from DAC, in this case, DAC 1 outputs positive phase and DAC 2 outputs negative phase.

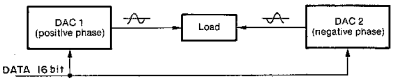

As shown above, the current to load performs push-pull operation for the signal. As a result, the same phase component is cancelled and even distortion is also cancelled.

Assuming that the load is replaced with an amplifier, the same way of thinking may be applicable. In this case, waveform composition is made in the amplifier as shown below.

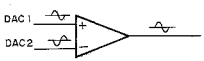

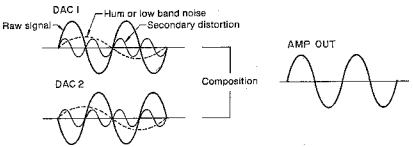

The data signal (DABD) of DIG FIL is inverted and entered into the DAC (−L/R) to obtain inverted output after D-A conversion. The secondary harmonic distortion generated in DAC or amplifier can be cancelled by composing "+L CH and −L CH" or "+R CH and −R CH".

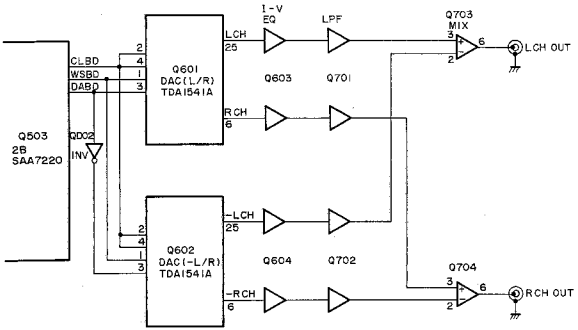

TECHNICAL SPECIFICATIONS

Audio Characteristics

Number of channels	2
Frequency response	2 – 20,000 Hz ±0.1 dB
Digital to analogue conversion	16 bit 4 times oversamping
Dynamic range	Better than 96 dB
Signal-to-noise ratio	101 dB
Channel separation	Better than 100 dB (1000 Hz)
Total harmonic distortion	0.0015% (1000 Hz)
Wow & flutter	Unmeasurable (quartz accuracy)
Error correction system	Cross Interleave Reed Solomon code (CIRC)
Audio output level	2 Vrms

Optical Data Read System

Laser	AlGaAs semiconductor laser
Wave length	780 mm

Signal Format

Sampling frequency	44.1 kHz
Quantization	16-bit linear/channel

Power Supply Section

Power requirements	220/240V AC, 50/60 Hz
Power consumption	Approx. 30 W
Fuse capacitance	0.2 A

Cabinet and Others

Dimensions	
Panel Width	462 mm
Panel Height	86 mm
Depth	333 mm
Weight	Approx. 12.5 kg
Allowable operating temperature	+5°C – +35°C
Allowable operating humidity	5 – 90% (No condensation)

Provided Accessories

Remote control unit	1
Battery (AA/R06)	2
Audio connection (RCA pin-jack) cord	1 pair

Compact Discs

Diameter of disc	120 mm
Thickness	1.2 mm
Rotating direction	Counterclockwise (viewed from the laser pickup side)
Scanning velocity	1.2 – 1.4 m/sec
Revolution (spindle) speed	500 – 200 rpm
Playing time (theoretical)	74 minutes max. (stereo)
Track pitch	1.6 μm
Material	Plastic (polycarbonate)

* Improvement may result in changes in specifications and design without notice.

EXPLODED VIEW AND PARTS LIST

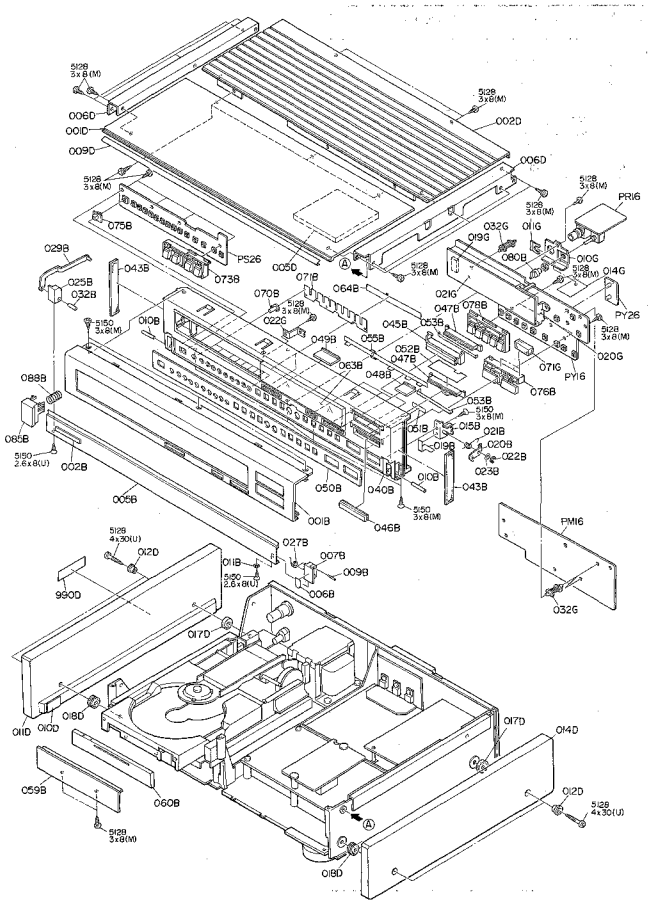

REF. DESIG.	PART NO.	DESCRIPTION
001B	4822 444 50576	Front Panel (BLK)
	4822 444 50699	Front Panel (GLD)
002B	4822 454 11825	Badge
005B	4822 454 30431	Escutcheon, Front Door (BLK)
	4822 444 50618	Escutcheon, Front Door (GLD)
007B	4822 417 10991	Hinge (R)
009B	4822 535 92367	Shaft, Lock
010B	4822 535 92368	Shaft, Hinge
015B	4822 402 61225	Bracket (K), Lock
020B	4822 402 61096	Hook, Lock
021B	4822 492 42171	Spring
022B	4822 532 11301	RC Ring E Type φ2.5
023B	4822 532 52081	Washer
025B	4822 417 11061	Hinge (L)
027B	4822 492 42172	Spring, Door Open
029B	4822 402 50243	Joint (K)
032B	4822 535 92369	Shaft
040B	4822 464 50674	Chassis, Front (BLK)
	4822 464 50709	Chassis, Front (GLD)
045B	4822 410 25889	Button, Play (BLK)
	4822 410 26284	Button, Play (GLD)
046B	4822 410 25893	Button, Stop (BLK)
	4822 410 26285	Button, Stop (GLD)
047B	4822 381 10904	Lens
048B	4822 410 25887	Button, Track/FTS (BLK)
	4822 410 26281	Button, Track/FTS (GLD)
049B	4822 410 25891	Button, Open/Close (BLK)
	4822 410 26283	Button, Open/Close (GLD)
050B	4822 454 30831	Escutcheon (BLK)
	4822 454 30403	Escutcheon (GLD)
055B	4822 492 70153	Leaf Spring, Earth
059B	4822 454 30382	Escutcheon, Drawer (BLK)
	4822 454 30402	Escutcheon, Drawer (GLD)
063B	4822 450 61022	Window
070B	4822 410 25892	Button
071B	4822 492 63757	Leaf Spring
073B	4822 410 25886	Button, Select/Cancel
075B	4822 410 25883	Knob, Timer (BLK)
	4822 410 26286	Knob, Timer (GLD)
076B	4822 410 25884	Button, Index/FF, REW
078B	4822 410 25885	Button, LAP/AMS
080B	4822 412 20879	Knob, Level (BLK)
	4822 412 21006	Knob, Level (GLD)
065B	4822 410 26142	Button, Power (K) (BLK)
	4822 410 60142	Button, Power (K) (GLD)
088B	4822 492 51927	Spring Power Button
001D	4822 426 40407	Lid, Top Cover; Front (BLK)
	4822 426 40408	Lid, Top Cover; Front (GLD)
002D	4822 426 51234	Lid, Top Cover; Rear (BLK)
	4822 426 51262	Lid, Top Cover; Rear (GLD)
011D	4822 426 30135	Side Panel (L) (BLK)
	4822 444 40235	Side Panel (L) (GLD)
012D	4822 532 11266	Bushing
014D	4822 426 30136	Side Panel (R) (BLK)
	4822 444 40236	Side Panel (R) (GLD)
017D	4822 462 71578	Buffer (L, R)
018D	4822 532 52077	Collar (K)

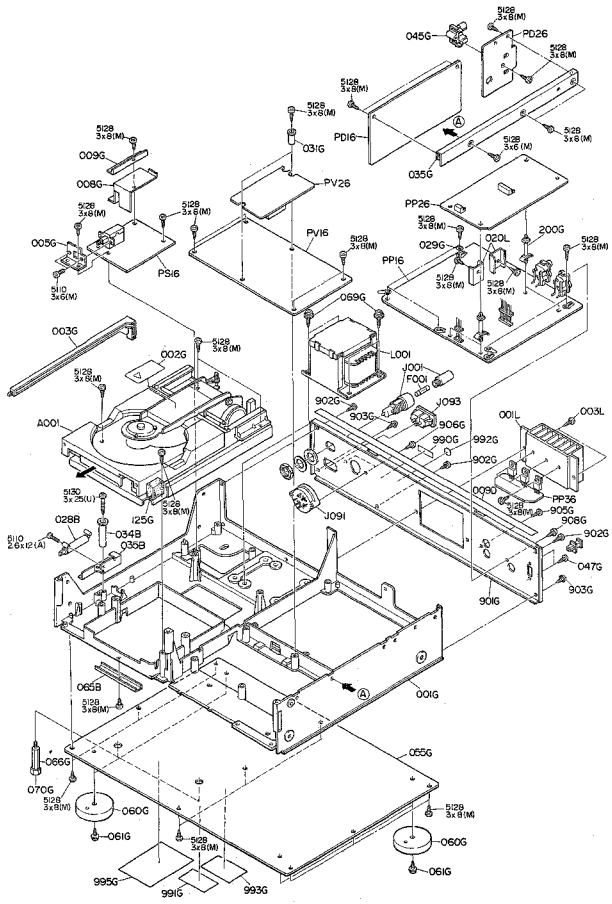

REF. DESIG.	PART NO.	DESCRIPTION
028B	4822 464 50493	Piston, Dumper
003G	4822 402 50237	Link, Power Switch
045G	4822 256 91247	Holder, Optical
047G	4822 502 12511	B.T. Screw B3 x 8
060G	4822 462 41383	Leg (BLK)
	4822 462 41336	Leg (GLD)
061G	4822 502 12511	B.T. Screw B3 x 8
069G	4822 501 11008	B.T. Screw B4 x 8
200G	4822 325 20153	Support
902G	4822 502 12511	B.T. Screw B3 x 8
905G	4822 502 12511	B.T. Screw B3 x 8
906G	4822 502 12511	B.T. Screw B3 x 8
003L	4822 502 12511	B.T. Screw B3 x 8
A001	4822 691 30222	Mechanism, Loading
⚠ F001	4822 253 30014	Fuse T315mA [E]
	4822 253 30127	Fuse T250mA [N, A, T, W]
⚠ J001	4822 256 30233	Jack, Fuse Holder
J091	4822 272 10227	Voltage Selector [E]
	4822 272 10236	Voltage Selector [N, A, T, W]
J093	4822 267 30986	Plug, AC Inlet
⚠ L001	4822 146 30679	Power Transformer [E]
	4822 148 80772	Power Transformer [N, A, T, W]
001Z	4822 535 60105	Adaptor

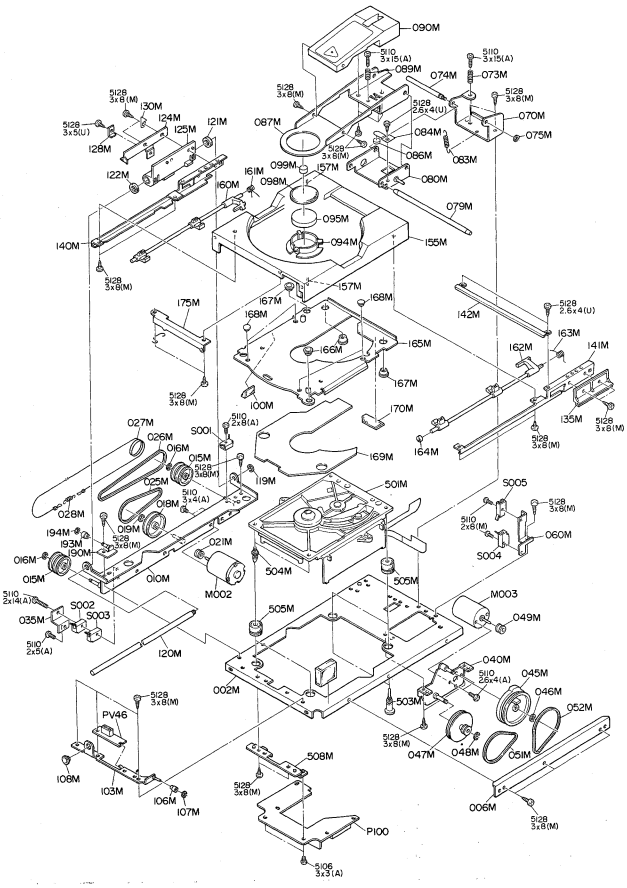

REF. DESIG.	PART NO.	DESCRIPTION
015M	4822 528 81163	Pulley, Wire Wheel
016M	4822 532 11301	RG Ring, E Type φ2.5
018M	4822 528 81238	Pulley, Tray Drive
019M	4822 532 11301	RG Ring, E Type φ2.5
021M	4822 528 81166	Pulley, Motor
025M	4822 358 30762	Belt, Motor
026M	4822 358 30903	Belt, Tray Drive
027M	4822 321 30338	Joint, Wire Rope
028M	4822 492 32719	Spring
045M	4822 528 30331	Cam, Clamper Drive
046M	4822 532 11301	RG Ring, E Type φ2.5
047M	4822 528 81164	Pulley, Clamper Drive
048M	4822 532 11301	RG Ring, E Type φ2.5
049M	4822 528 81166	Pulley, Motor
051M	4822 358 30762	Belt, Motor
052M	4822 358 30763	Belt, Cam Drive
073M	4822 492 63706	Spring, Down Adj.
074M	4822 535 92332	Shaft, Clamper Bracket
075M	4822 532 11301	RG Ring, E Type φ2.5
079M	4822 535 92575	Shaft, Tray Lever
083M	4822 492 63705	Spring, Pull Down
084M	4822 492 63709	Leaf Spring
086M	4822 466 61549	Buffer
087M	4822 402 30161	Lever, Clamper
089M	4822 492 63706	Spring, Up Adj.
094M	4822 402 61097	Clamper, Magnet Case
106M	4822 528 90645	Roller, Tray Guide
107M	4822 530 70119	RG Ring, E Type φ1.2
108M	4822 532 21323	Bushing, Front Guide
119M	4822 530 80307	RG Ring, E Type φ4
120M	4822 535 92331	Shaft, Tray Guide
155M	4822 444 50574	Case, Tray
157M	4822 535 92576	Shaft, Tray Guide
160M	4822 402 61089	Lever (L), Tray Lift
161M	4822 492 63707	Spring (L)
162M	4822 402 61091	Lever (R), Tray Lift
163M	4822 492 63708	Spring (R)
164M	4822 532 11432	Washer
165M	4822 444 60475	Tray, Disc
166M	4822 532 11697	Bushing, Tray Guide
167M	4822 532 21323	Bushing, Tray Guide
168M	4822 532 11698	Bushing, Disc Buffer
193M	4822 528 90645	Roller
194M	4822 530 70119	RG Ring, E Type φ1.2
501M	4822 691 30221	Mechanism (CDM-1)
503M	4822 535 92574	Shaft
504M	4822 535 92577	Shaft
505M	4822 532 52076	Bushing
M002	4822 361 60467	D.C. Motor, Tray Drive
M003	4822 361 60447	D.C. Motor, Clamper Drive
S001	4822 277 21132	Slide Switch, Tray In
S002	4822 277 21132	Slide Switch, Tray Out
S003	4822 277 21132	Slide Switch, Push In
S004	4822 277 21132	Slide Switch, Clamper Down
S005	4822 277 21132	Slide Switch, Clamper Up

ASSIGNMENT OF COMMON PARTS CODES.

RESISTOR

R***: (1) GD05 ---140, Carbon film fixed resistor, ±5%, 1/4W
R***: (2) GD05 ---160, Carbon film fixed resistor, ±5%, 1/6W

① — Resistance value

Examples
① Resistance value
0.1Ω...001 10Ω...100 1kΩ...102 100kΩ...104
0.5Ω...005 18Ω...180 2.7kΩ...272 680kΩ...684
1Ω...010 100Ω...101 10kΩ...103 1MkΩ...105
6.8Ω...068 390Ω...391 22kΩ...223 4.7MkΩ...475

(Note) Please distinguish 1/4W from 1/6W by the shape of parts used actually.

C***: CERAMIC CAP.
(1) DD1 ---370, Ceramic condenser
Disc type
①② Temp. coeff. P350 ~ N1000, 50V
Capacity value
Tolerance

Examples
① Tolerance (Capacity deviation)
±0.25pF...0
±0.5pF...1
±5%...5
* Tolerance of COMMON PARTS handled here are as follows:
0.5pF ~ 5pF...±0.25pF
6pF ~ 10pF...±0.5pF
12pF ~ 560pF...±5%
② Capacity value
0.5pF...005 3pF...030 100pF...101
1pF...010 10pF...100 220pF...221
1.5pF...015 47pF...470 560pF...561

C***: CERAMIC CAP.
(1) DK16 ---300, High dielectric constant ceramic condenser
Disc type
① Temp. chara. 2B4, 50V
Capacity value

Example
② Capacity value
100pF...101 1000pF...102 10000pF...103
470pF...471 2200pF...222

C***: ELECTROLY CAP. (⏥), FILM CAP. (⏥)
(1) EA ------10, Electrolytic condenser
One-way lead type, Tolerance ±20%
①②
Dielectric strength
Capacity value

Examples
① Capacity value
0.1μF...104 4.7μF...475 100μF...107
0.33μF...334 10μF...106 330μF...337
1μF...106 22μF...226 1100μF...108
2200μF...228
② Working voltage
6.3V...006 25V...025
10V...010 35V...035
16V...016 50V...050

(2) DF15 ---350, Plastic film condenser
One-way type, Mylar ±5% 50V
①
Capacity value

Examples
① Capacity value
0.001μF (1000pF)...102 0.1μF...104
0.0018μF.....182 0.56μF...564
0.01μF.....103 1μF...105
0.015μF.....153

ELECTRICAL PARTS LIST

REF. DESIG.	PART NO.	DESCRIPTION
		PD16-DEMO CIRCUIT BOARD
		PD16-CAPACITORS
C504	4822 124 22289	Elect 6.8μF 50V
C511	4822 122 40528	Ceramic 27pF ±5%
C512	4822 122 40528	Ceramic 27pF ±5%
C520	4822 121 42327	Film 470pF ±5%
C521	4822 121 42327	Film 470pF ±5%
C530	4822 122 32486	Ceramic 0.01μF +80% −20%
C531	4822 122 32486	Ceramic 0.01μF +80% −20%
		PD16-SEMICONDUCTORS
D530	4822 130 80302	Varistor MA27A
D544 ~ D549	4822 130 33305	Diode 1SS176, etc.
D551	4822 130 33305	Diode 1SS176, etc.
Q501	4822 209 71001	IC SAA7210
Q502	4822 209 73952	IC MB81416C-15
Q503	4822 209 72545	IC SAA7220P/B
Q504	4822 209 83641	IC IR2339
Q510	4822 130 42591	Transistor 2SA1175(FF, EF)
Q511	4822 130 61438	Transistor 2SA1005(K, L)
Q513	4822 130 42591	Transistor 2SA1175(FF, EF)
Q530	5322 130 42052	Transistor 2SC2785(FF, EF)
Q531	5322 130 42052	Transistor 2SC2785(FF, EF)
Q537	5322 130 42052	Transistor 2SC2785(FF, EF)
		PD16-MISCELLANEOUS
X501	4822 242 72395	Crystal 11.2896MHz
		PD26-OPTICAL OUT CIRCUIT BOARD
QD02	4822 209 10306	IC TC4049BP
QD03	4822 209 73951	IC PST523D
JD01	4822 265 10062	Jack, 3P
JD03	4822 321 22588	Jack, Optical
		PM16-FEATURE U-COM CIRCUIT BOARD
		PM16-CAPACITOR
CF11	4822 122 32703	Ceramic 330pF ±10%, Chip
CF12	4822 122 33117	Ceramic 330pF ±5%, Chip
CF13	4822 122 32703	Ceramic 330pF ±10%, Chip
CF21 ~ CF29	4822 122 32703	Ceramic 330pF ±10%, Chip
CF38 ~ CF43	4822 122 32703	Ceramic 330pF ±10%, Chip
CF61 ~ CF67	4822 122 32703	Ceramic 330pF ±10%, Chip
CF85 ~ CF87	4822 122 32703	Ceramic 330pF ±10%, Chip
CF91	4822 122 32703	Ceramic 330pF ±10%, Chip

REF. DESIG.	PART NO.	DESCRIPTION
		PM16-RESISTORS (All Resistors are ±5% and 1/16W)
RF14	4822 111 90895	10KΩ, Chip
RF15	4822 111 90895	10KΩ, Chip
RF16	4822 111 90895	10KΩ, Chip
RF19	4822 111 90895	10KΩ, Chip
RF20	4822 111 90895	10KΩ, Chip
RF21	4822 111 90896	100KΩ, Chip
RF22	4822 111 90896	100KΩ, Chip
RF26	4822 111 90894	1KΩ, Chip
RF27	4822 111 91414	10Ω, Chip
RF28	4822 111 90906	2.2KΩ, Chip
RF29	4822 111 91414	10Ω, Chip
RF30	4822 111 90894	1KΩ, Chip
RF32	4822 111 90918	4.7KΩ, Chip
RF33	4822 111 90918	4.7KΩ, Chip
RF35	4822 111 90892	0Ω, Chip
⚠ RF50	4822 116 60307	1Ω ¼W, Fusible
RF51	4822 111 91139	6.8KΩ, Chip
		PM16-SEMICONDUCTORS
DF03	4822 130 43408	Diode MA151WK, Chip
DF05	4822 130 43408	Diode MA151WK, Chip
DF50	4822 130 32508	Diode RL103E, etc.
DF51	4822 130 33948	Zener 5.6V
DM01	4822 130 80346	Zener 02CZ8.2, Chip
DM02	4822 130 80346	Zener 02CZ8.2, Chip
QF01	4822 209 11497	IC MSM83C154
QF02	4822 209 11496	IC MSM80C51
QF03	4822 209 51273	IC MSM2816/XL2816
QF07	4822 130 61437	Semicon Composit DTC114YK
QF08	4822 130 61437	Semicon Composit DTC114YK
QF10	4822 130 61437	Semicon Composit DTC114YK
QF11	4822 209 73949	IC PST524D
QM01	4822 209 83803	IC LB1645N
QM02	4822 209 83803	IC LB1645N
QM03	4822 130 61437	Semicon Composit DTC114YK
		PM16-MISCELLANEOUS
LM01	4822 156 10676	Choke Coil 47μF
XF01	4822 242 71781	Seramic Vibrator, 12.0MHz
XF02	4822 242 71781	Seramic Vibrator, 12.0MHz
		PP16-AUDIO/POWER CIRCUIT BOARD
		PP16-CAPACITORS
CB01	4822 122 40491	Ceramic 0.022μF +80% −20%
CB04 ~ CB08	4822 122 32486	Ceramic 0.01μF +80% −20%
CB11	4822 122 40617	Ceramic 0.1μF +80% −20%
CB12	4822 122 32486	Ceramic 0.01μF +80% −20%
C701	4822 121 42691	Film 2200pF ±5%
C702	4822 121 51144	Film 1000pF ±2%
C703	4822 121 42691	Film 2200pF ±5%
C704	4822 121 51144	Film 1000pF ±2%
C708	4822 124 90387	Elect 220μF 6.3V
C709	4822 124 90387	Elect 220μF 6.3V
C710	4822 124 90352	Elect 10μF 16V
C731	4822 121 42691	Film 2200pF ±5%
C732	4822 121 51144	Film 1000pF ±2%
C733	4822 121 42691	Film 2200pF ±5%

REF. DESIG.	PART NO.	DESCRIPTION
C734	4822 121 51144	Film 1000pF ±2%
C738	4822 124 90387	Elect 220μF 6.3V
C739	4822 124 90387	Elect 220μF 6.3V
C740	4822 124 90352	Elect 10μF 16V
C785	4822 124 22238	Elect 100μF 25V
C786	4822 124 22238	Elect 100μF 25V
C787	4822 124 41535	Elect 100μF 25V
C788	4822 124 41535	Elect 100μF 25V
C795	4822 124 22238	Elect 100μF 25V
C796	4822 124 22238	Elect 100μF 25V
C797	4822 124 41535	Elect 100μF 25V
C798	4822 124 41535	Elect 100μF 25V
C803	4822 122 32486	Ceramic 0.01μF +80% −20%
C804	4822 122 32486	Ceramic 0.01μF +80% −20%
C805	4822 124 22735	Elect 6800μF 27V
C806	4822 124 22735	Elect 6800μF 27V
C807	4822 124 90058	Elect 47μF 25V
C808	4822 124 90058	Elect 47μF 25V
C811	4822 124 22734	Elect 470μF 25V
C812	4822 124 22734	Elect 470μF 25V
C821	4822 124 90364	Elect 220μF 16V
C831	4822 122 32486	Ceramic 0.01μF +80% −20%
C834	4822 122 32486	Ceramic 0.01μF +80% −20%
C836	4822 124 22723	Elect 1000μF 25V
C837	4822 124 22723	Elect 1000μF 25V
C838	4822 124 90364	Elect 220μF 16V
C839	4822 124 90364	Elect 220μF 16V
C841	4822 122 32486	Ceramic 0.01μF +80% −20%
C845	4822 124 22243	Elect 6800μF 16V
C846	4822 124 90364	Elect 220μF 16V
		PP16-RESISTORS
R701 ~ R704	4822 116 80262	2.37KΩ ±1% ¼W
R731 ~ R734	4822 116 80262	2.37KΩ ±1% ¼W
⚠ R785 ~ ⚠ R788	4822 116 60446	47Ω ±5% ¼W
R795 ~ R798	4822 116 60446	47Ω ±5% ¼W
⚠ R801	4822 116 60553	1.8Ω ±5% ½W, Fusible
⚠ R802	4822 116 60553	1.8Ω ±5% ½W, Fusible
⚠ R803	4822 116 60446	3.3Ω ±5% ½W, Fusible
⚠ R804	4822 116 60446	3.3Ω ±5% ½W, Fusible
R807	5322 116 53214	562Ω ±2% ¼W
R808	5322 116 53214	562Ω ±2% ¼W
R809	4822 116 53079	3.83KΩ ±2% ¼W
R810	4822 116 53079	3.83KΩ ±2% ¼W
R813	4822 116 52956	1.21KΩ ±2% ¼W
R814	4822 116 52956	1.21KΩ ±2% ¼W
R815	5322 116 53185	1.47KΩ ±2% ¼W
R816	5322 116 53185	1.47KΩ ±2% ¼W
R817	4822 116 52956	1.21KΩ ±2% ¼W
R818	4822 116 52956	1.21KΩ ±2% ¼W
R871	4822 116 60331	1KΩ ±5% 1W
R872	4822 116 60331	1KΩ ±5% 1W

REF. DESIG.	PART NO.	DESCRIPTION	
		PP16-SEMICONDUCTORS	
DN01 ~ DN04	4822 130 31018	Diode	1SS155, etc.
DN06	4822 130 31018	Diode	1SS155, etc.
DN08	4822 130 31018	Diode	1SS155, etc.
DN09	4822 130 31018	Diode	1SS155, etc.
DN10	4822 130 32377	Zener	RD3.9EB1
DN11	4822 130 32377	Zener	RD3.9EB1
DN12	4822 130 31018	Diode	1SS155, etc.
D805	4822 130 32366	Zener	5.6V
D806	4822 130 32366	Zener	5.6V
⚠D807	4822 130 32155	Diode	W06B
⚠D808	4822 130 32155	Diode	W06B
⚠D809	4822 130 32155	Diode	W06B
⚠D810	4822 130 32155	Diode	W06B
D821	4822 130 32191	Zener	RD7.5E-B3
D822	4822 130 80425	Zener	4.7V
D823	4822 130 31018	Diode	1SS155, etc.
⚠D831	4822 130 32508	Diode	RL103E, etc.
⚠D832	4822 130 32508	Diode	RL103E, etc.
⚠D833	4822 130 32508	Diode	RL103E, etc.
⚠D834	4822 130 32508	Diode	RL103E, etc.
⚠D841	4822 130 33056	Diode	U05B
⚠D842	4822 130 33056	Diode	U05B
⚠D843	4822 130 33056	Diode	U05B
⚠D844	4822 130 33056	Diode	U05B
QN01	4822 130 42591	Transistor	2SA1175(FF, EF)
QN02	4822 130 61439	Transistor	2SB1237(R)
QN03	4822 130 42052	Transistor	2SC2785(FF, EF)
Q701	4822 209 73953	IC	NJM4580DD
Q702	4822 209 73953	IC	NJM4580DD
Q703	4822 209 70226	IC	NJM5534D
Q704	4822 209 70226	IC	NJM5534D
⚠Q801	4822 130 43311	Transistor	2SC3298(O, Y)
Q802	4822 130 60839	Transistor	2SC2458(Y, GR)
Q803	4822 130 60107	Transistor	2SA1048(Y, GR)
⚠Q804	4822 130 43023	Transistor	2SA1306(O, Y)
Q805	5322 130 42052	Transistor	2SC2785(FF, EF)
Q806	4822 130 42591	Transistor	2SA1175(FF, EF)
⚠Q821	4822 130 61176	Transistor	2SB1357(D, E)
Q822	4822 130 42591	Transistor	2SA1175(FF, EF)
		PP16-MISCELLANEOUS	
⚠F831	4822 253 30018	Fuse	T630mA
⚠F832	4822 253 30018	Fuse	T630mA
⚠F841	4822 253 30024	Fuse	T1.6A
JD12	4822 265 10062	Jack, 3P	
JD20	4822 265 20354	Terminal, 1P; RCA	
JG02	4822 256 30329	Jack, Fuse Holder	
JG03	4822 267 30978	Jack, Fuse Holder	
JG11	4822 256 30329	Jack, Fuse Holder	
JG12	4822 267 30978	Jack, Fuse Holder	
JG13	4822 256 30329	Jack, Fuse Holder	
JG14	4822 267 30978	Jack, Fuse Holder	
J705	4822 267 31027	Terminal, Audio Out	
LD01	4822 142 60388	Pulse Transformer	
L701	4822 280 20361	Relay	

REF. DESIG.	PART NO.	DESCRIPTION			
		PP26-DAC CIRCUIT BOARD			
		PP26-CAPACITORS			
C603	4822 122 40617	Ceramic	0.1μF	+80%	−20%
C604	4822 124 22238	Elect	100μF		25V
C605	4822 122 40617	Ceramic	0.1μF	+80%	−20%
C606	4822 124 22238	Elect	100μF		25V
C607	4822 122 40617	Ceramic	0.1μF	+80%	−20%
C608	4822 122 40617	Ceramic	0.1μF	+80%	−20%
C614	4822 122 40617	Ceramic	0.1μF	+80%	−20%
C615	4822 124 90058	Elect	47μF		25V
C616	4822 122 40617	Ceramic	0.1μF	+80%	−20%
C617	4822 124 90058	Elect	47μF		25V
C618	4822 121 42713	Film	680pF	±5%	
C619	4822 121 42713	Film	680pF	±5%	
C621 ~ C634	4822 121 43268	Film	0.1μF	±10%	
C641 ~ C654	4822 121 43268	Film	0.1μF	±10%	
C661	4822 124 22237	Elect	10μF		16V
C662	4822 124 22237	Elect	10μF		16V
C663	4822 124 22237	Elect	10μF		16V
C664	4822 124 22237	Elect	10μF		16V
C671	4822 121 51282	Film	2400pF	±2%	
C672	4822 121 43271	Film	5600pF	±5%	
C673	4822 121 43269	Film	0.018μF	±5%	
C674	4822 121 51282	Film	2400pF	±2%	
C675	4822 121 43271	Film	5600pF	±5%	
C676	4822 121 43269	Film	0.018μF	±5%	
C681	4822 121 51282	Film	2400pF	±2%	
C682	4822 121 43271	Film	5600pF	±5%	
C683	4822 121 43269	Film	0.018μF	±5%	
C684	4822 121 51282	Film	2400pF	±2%	
C685	4822 121 43271	Film	5600pF	±5%	
C686	4822 121 43269	Film	0.018μF	±5%	
C691	4822 124 22238	Elect	100μF		25V
C692	4822 124 22238	Elect	100μF		25V
C693	4822 124 22238	Elect	100μF		25V
C694	4822 124 22238	Elect	100μF		25V
		PP26-RESISTORS			
R631	4822 116 53758	1.62KΩ	±2%	¼W	
R632	4822 116 53393	825Ω	±2%	¼W	
R636	4822 116 53758	1.62KΩ	±2%	¼W	
R637	4822 116 53393	825Ω	±2%	¼W	
R641	4822 116 53758	1.62KΩ	±2%	¼W	
R642	4822 116 53393	825Ω	±2%	¼W	
R646	4822 116 53758	1.62KΩ	±2%	¼W	
R647	4822 116 53393	825Ω	±2%	¼W	
⚠R691	4822 116 60446	3.3Ω	±5%	¼W	
⚠R692	4822 116 60446	3.3Ω	±5%	¼W	
⚠R693	4822 116 60446	3.3Ω	±5%	¼W	
⚠R694	4822 116 60446	3.3Ω	±5%	¼W	
		PP26-SEMICONDUCTORS			
Q601	4822 209 72969	IC	TDA1541A		
Q602	4822 209 72969	IC	TDA1541A		
Q603	4822 209 73953	IC	NJM4580DD		
Q604	4822 209 73953	IC	NJM4580DD		
Q607	4822 130 42842	F.E.T.	2SK372(GR, BL)		
Q608	4822 130 42842	F.E.T.	2SK372(GR, BL)		
Q609	4822 130 42842	F.E.T.	2SK372(GR, BL)		
Q610	4822 130 42842	F.E.T.	2SK372(GR, BL)		

REF. DESIG.	PART NO.	DESCRIPTION
		PP36-3 REGULATOR CIRCUIT BOARD
D845	4822 130 32508	Diode RL103E, etc.
⚠ Q831	4822 209 73954	IC NJM7912FA
⚠ Q832	4822 209 70084	IC NJM7812FA
⚠ Q841	4822 130 61442	Transistor 2SD1913(R, S)
		PR16-HEADPHONE AMP CIRCUIT BOARD
R900	4822 100 20632	Variable Resistor 10KΩ(A)
Q901	4822 209 83654	IC NJM4556D
Q903	4822 130 43818	Transistor 2SC2878
Q804	4822 130 43818	Transistor 2SC2878
Q905	4822 130 43818	Transistor 2SC2878
Q906	4822 130 43818	Transistor 2SC2878
J901	4822 267 31026	Jack, Headphone
		PS16-LINE FILTER/POWER SWITCH CIRCUIT BOARD
CH01	4822 123 30064	Film Cap. 0.15μF ±20% [A,N,E]
CH02	4822 123 30064	Film Cap. 0.15μF ±20% [A,N,E]
CH03	4822 123 40488	Ceramic Cap. 470pF ±10% [A,N,E]
CH04	4822 123 40488	Ceramic Cap. 470pF ±10% [A,N,E]
⚠ GH01	4822 122 33276	Ceramic Cap. 0.01μF ±20%
RH01	4822 116 80472	Resistor 220KΩ ±10% ¼W[A,N,E]
⚠ SH01	4822 276 11141	Push Switch, Power
		PS26-TEN KEYS CIRCUIT BOARD
SS01 ~ SS15	4822 276 12455	Push Switch, Tact
SS16	4822 277 30883	Slide Switch
		PV16-SERVO CIRCUIT BOARD
		PV16-CAPACITORS
C233	4822 124 21903	Elect 1μF 50V
C255	4822 124 21903	Elect 1μF 50V
C257	4822 124 40464	Elect 4.7μF 35V
C274	4822 124 90365	Elect 220μF 25V
C276	4822 124 90365	Elect 220μF 25V
C278	4822 124 90365	Elect 220μF 25V
		PV16-RESISTORS
R211	4822 116 80256	5.62MΩ ±1% 1/6W
R212	4822 116 80256	5.62MΩ ±1% 1/6W
⚠R231	4822 116 60314	10Ω ±5% ¼W, Fusible
⚠R232	4822 116 60314	10Ω ±5% ¼W, Fusible
⚠R233	4822 116 53696	120Ω ±5% ¼W, Fusible
⚠R234	4822 116 53696	120Ω ±5% ¼W, Fusible
R254	4822 116 80261	91KΩ ±5% 1/6W
R274	4822 116 80252	13KΩ ±1% 1/6W
R275	4822 116 80261	90.9KΩ ±1% 1/6W
R277	4822 116 80255	357KΩ ±1% 1/6W

REF. DESIG.	PART NO.	DESCRIPTION
		PV16-SEMICONDUCTORS
D205	4822 130 33305	Diode 1SS176, etc.
D253	4822 130 32191	Zener RD7.5EB3
D271	4822 130 33305	Diode 1SS176, etc.
D272	4822 130 33305	Diode 1SS176, etc.
D274	4822 130 33305	Diode 1SS176, etc.
D275	4822 130 33305	Diode 1SS176, etc.
D401	4822 130 32366	Zener 5.6V
Q201	4822 209 80401	IC NJM4558D
Q202	4822 130 42591	Transistor 2SA1175(FF, EF)
Q203	5322 130 42052	Transistor 2SC2785(FF, EF)
Q204	4822 130 61179	Transistor 2SD2037(D, E)
Q205	4822 130 61176	Transistor 2SB1357(D, E)
Q231	4822 130 61176	Transistor 2SB1357(D, E)
Q232	4822 130 61179	Transistor 2SD2037(D, E)
Q233	4822 209 83643	IC IR3741
Q251	4822 209 80401	IC NJM4558D
Q252	4822 130 42591	Transistor 2SA1175(FF, EF)
Q253	5322 130 42052	Transistor 2SC2785(FF, EF)
Q254	4822 130 42591	Transistor 2SA1175(FF, EF)
Q255	5322 130 42052	Transistor 2SC2785(FF, EF)
Q256	5322 130 42052	Transistor 2SC2785(FF, EF)
Q271	4822 209 71674	IC 80C51
Q272	5322 130 42052	Transistor 2SC2785(FF, EF)
Q402	4822 209 80401	IC NJM4558D
Q403	4822 130 42591	Transistor 2SA1175(FF, EF)
Q404	4822 130 42591	Transistor 2SA1175(FF, EF)
Q405	4822 130 42842	F.E.T. 2SK272(GR, BL)
Q406	4822 130 42842	F.E.T. 2SK372(GR, BL)
Q407	4822 130 61441	Transistor 2SD1862(Q, R)
		PV16-MISCELLANEOUS
L231	4822 157 53801	Choke Coil 47μH
L232	4822 157 53801	Choke Coil 47μH
X201	4822 242 71781	Ceramic Viblator 12MHz
		PV26-SERVO MODULE CIRCUIT BOARD
		PV26-CAPACITORS
C301	4822 121 43267	Film 6800pF ±2%
C302	4822 121 43267	Film 6800pF ±2%
C305	4822 121 43265	Film 5600pF ±2%
C306	4822 121 43265	Film 5600pF ±2%
C308	4822 122 33084	Ceramic 390pF ±5%
C310	4822 121 43266	Film 680pF ±2%
C311	4822 121 43264	Film 1800pF ±2%
C312	4822 121 43267	Film 6800pF ±2%
C314	4822 121 43267	Film 6800pF ±2%
C315	4822 121 43267	Film 6800pF ±2%
C316	4822 122 32904	Ceramic 0.1μF ±10%, Chip
		PV26-RESISTORS (All Resistors are ±5% and 1/10W)
R300	4822 111 90883	10KΩ ±1%, Chip
R301	4822 111 90883	10KΩ ±1%, Chip
R302	4822 111 90885	2.7KΩ ±1%, Chip
R303	4822 111 91365	470Ω ±1%, Chip
R304	4822 111 90906	2.2KΩ, Chip
R306	4822 111 90883	10KΩ ±1%, Chip
R307	4822 111 90883	10KΩ ±1%, Chip
R308	4822 111 90885	2.7KΩ ±1%, Chip
R309	4822 111 91365	470Ω ±1%, Chip
R310	4822 111 90906	2.2KΩ, Chip

REF. DESIG.	PART NO.	DESCRIPTION
R311	4822 111 90895	10KΩ, Chip
R312	4822 111 90895	10KΩ, Chip
R313	4822 111 90925	68KΩ, Chip
R314	4822 111 90919	47KΩ, Chip
R315	4822 111 90919	47KΩ, Chip
R316	4822 111 90918	4.7KΩ, Chip
R317	4822 111 90919	47KΩ, Chip
R318	4822 111 90925	68KΩ, Chip
R320	4822 111 91366	5.6KΩ ±1%, Chip
R321	4822 111 91355	13KΩ ±1%, Chip
R323	4822 111 91361	330KΩ ±1%, Chip
R324	4822 111 90916	3.9KΩ, Chip
R325	4822 111 91369	1.5KΩ, Chip
R326	4822 111 90907	22KΩ, Chip
R327	4822 111 90907	22KΩ, Chip
R328	4822 111 90923	56KΩ, Chip
R329	4822 111 90923	56KΩ, Chip
R330	4822 111 91192	470Ω, Chip
R331	4822 111 91192	470Ω, Chip
R332	4822 111 91372	820Ω, Chip
R333	4822 111 91369	1.5KΩ, Chip
R334	4822 111 91192	470Ω, Chip
R335	4822 111 91373	82KΩ, Chip
R336	4822 111 90925	68KΩ, Chip
R337	4822 111 91356	130KΩ ±1%, Chip
R338	4822 111 90923	56KΩ, Chip
R339	4822 111 90907	22KΩ, Chip
R340	4822 111 90896	100KΩ, Chip
R341	4822 111 91371	470KΩ, Chip
R342	4822 111 90895	10KΩ, Chip
R343	4822 111 90918	4.7KΩ, Chip
R345	4822 111 90918	4.7KΩ, Chip
R346	4822 111 91371	470KΩ, Chip
R347	4822 111 90896	100KΩ, Chip
R348	4822 111 90913	33KΩ, Chip
R349	4822 111 90926	8.2KΩ, Chip
R351	4822 111 90926	8.2KΩ, Chip
R352	4822 111 90925	68KΩ, Chip
R355	4822 111 90923	56KΩ, Chip
R356	4822 111 91358	24KΩ ±1%, Chip
R357	4822 111 90897	1MΩ, Chip
R358	4822 111 91363	360KΩ ±1%, Chip
R359	4822 111 90907	22KΩ, Chip
R360	4822 111 90887	6.8KΩ ±1%, Chip
R361	4822 111 90887	6.8KΩ ±1%, Chip
R362	4822 111 90889	82KΩ ±1%, Chip
R363	4822 111 90889	82KΩ ±1%, Chip
R364	4822 111 90918	4.7KΩ, Chip
R365	4822 111 90895	10KΩ, Chip
R366	4822 111 91371	470KΩ, Chip
R367	4822 111 90913	33KΩ, Chip
R368	4822 111 90895	10KΩ, Chip
R369	4822 111 90918	4.7KΩ, Chip
R370	4822 111 91362	36KΩ ±1%, Chip
R371	4822 111 91346	3.9KΩ ±1%, Chip
R372	4822 111 91363	360KΩ ±1%, Chip
R373	4822 111 90909	2.7KΩ, Chip
R374	4822 111 90896	100KΩ, Chip
R375	4822 111 90918	4.7KΩ, Chip
R376	4822 111 90913	33KΩ, Chip

REF. DESIG.	PART NO.	DESCRIPTION
R379	4822 111 90911	27KΩ, Chip
R380	4822 111 90918	4.7KΩ, Chip
R381	4822 111 90925	68KΩ, Chip
R382	4822 111 90918	4.7KΩ, Chip
R385	4822 111 91359	27KΩ ±1%, Chip
R386	4822 111 91357	180KΩ ±1%, Chip
R387	4822 111 90919	47KΩ, Chip
R388	4822 111 90919	47KΩ, Chip
R389	4822 111 90896	100KΩ, Chip
R390	4822 111 91367	75KΩ ±1%, Chip
R391	4822 111 91367	75KΩ ±1%, Chip
R393	4822 111 91361	330KΩ ±1%, Chip
R394	4822 111 90908	220KΩ, Chip
R395	4822 111 90896	100KΩ, Chip
R396	4822 111 91368	120KΩ, Chip
R397	4822 111 90919	47KΩ, Chip
R398	4822 111 90919	47KΩ, Chip
		PV26-SEMICONDUCTORS
D301	4822 130 80274	Zener 2.4V, Chip
D302	4822 130 43408	Diode MA151WK, Chip
D303	4822 130 43408	Diode MA151WK, Chip
D304	4822 130 32868	Diode MA153, Chip
D305	4822 130 32955	Zener 5.1V, Chip
D306	4822 130 32635	Diode MA151K, Chip
Q301	4822 209 71675	IC NJM2902M
Q302	4822 209 71675	IC NJM2902M
Q303	4822 209 71675	IC NJM2902M
Q304	4822 209 71676	IC NJM2901M
Q305	4822 209 11607	IC 4030
Q306	4822 209 83368	IC 4053
Q307	4822 209 71451	IC NJM4558M
Q308	4822 130 60658	Transistor 2SC2351, Chip
Q309	4822 209 83363	IC FMW1
Q311	4822 209 83363	IC FMW1
Q312	4822 130 42733	Transistor 2SA1162(G), Chip
Q314	4822 130 60146	Semicon Composit DTC144EK
Q315	4822 130 43398	Transistor 2SC2712(G), Chip
Q316	4822 130 60657	Transistor 2SC1009, Chip
Q317	4822 130 60657	Transistor 2SC1009, Chip
Q318	4822 130 60146	Semicon Composit DTC144EK
		PV36-PHOTO REFLECTOR CIRCUIT BOARD
Q401	4822 130 81182	L.E.D. ON2179R
		PY16-DISPLAY CIRCUIT BOARD
		PY16-CAPACITORS
CY02	4822 122 32669	Ceramic 0.047μF, Chip
CY04	4822 122 32693	Ceramic 33pF ±5%, Chip
CY05	4822 122 32693	Ceramic 33pF ±5%, Chip
CY07 ~ CY14	4822 122 32697	Ceramic 2200pF ±10%, Chip

REF. DESIG.	PART NO.	DESCRIPTION
		PY16-RESISTORS
RY01 ~ RY05	4822 111 90901	150KΩ ±5% 1/10W, Chip
RY06 ~ RY13	4822 111 90895	10KΩ ±5% 1/10W, Chip
RY16	4822 111 90922	5.6KΩ ±5% 1/10W, Chip
RY17	4822 111 90922	5.6KΩ ±5% 1/10W, Chip
RY18	4822 111 90922	5.6KΩ ±5% 1/10W, Chip
RY19	4822 111 91139	6.8KΩ ±5% 1/10W, Chip
RY20	4822 111 90922	5.6KΩ ±5% 1/10W, Chip
RY21	4822 111 90922	5.6KΩ ±5% 1/10W, Chip
RY22	4822 111 90918	4.7KΩ ±5% 1/10W, Chip
RY23	4822 111 90918	4.7KΩ ±5% 1/10W, Chip
RY24	4822 111 90918	4.7KΩ ±5% 1/10W, Chip
RY25	4822 111 90914	330KΩ ±5% 1/10W, Chip
RY26	4822 111 90895	10KΩ ±5% 1/10W, Chip
RY27	4822 111 90895	10KΩ ±5% 1/10W, Chip
		PY16-SEMICONDUCTORS
DY01 ~ DY06	4822 130 32635	Diode MA151K, Chip
QY01	4822 209 71677	IC LC6554D
QY02 ~ QY06	4822 130 61436	Semicon Composit DTA114YK
QY10	4822 130 42737	Transistor 2SD1328(S), Chip
QY11	4822 130 42737	Transistor 2SD1328(S), Chip
QY12	4822 130 43398	Transistor 2SC2712(G), Chip
QY13	4822 130 43398	Transistor 2SC2712(G), Chip
QY14	4822 130 43398	Transistor 2SC2712(G), Chip
QY15	4822 209 73951	IC PST523D
		PY16-MISCELLANEOUS
SY01	4822 276 11559	Push Switch, Stop
SY02	4822 276 11559	Push Switch, Pause
SY03	4822 276 11559	Push Switch, Play
SY05 ~ SY16	4822 276 11559	Push Switch
VY01	4822 130 90441	Display Unit
XY01	4822 242 71495	Ceramic Vibrator 3.00MHz
ZY01	4822 130 81183	Photo Unit
		PY26-LAMP CIRCUIT BOARD
DY51	4822 130 32508	Diode RL103E, etc.
DY52	4822 130 32508	Diode RL103E, etc.
VY51	4822 134 40865	Lamp, Play
VY52	4822 134 40864	Lamp, Pause

NOTE ON SAFETY:
Symbol ⚠ Fire or electrical shock hazard. Only original parts should be used to replace any part marked with symbol ⚠. Any other component substitution (other than original type), may increase risk of fire or electrical shock hazard.

BLOCK DIAGRAM

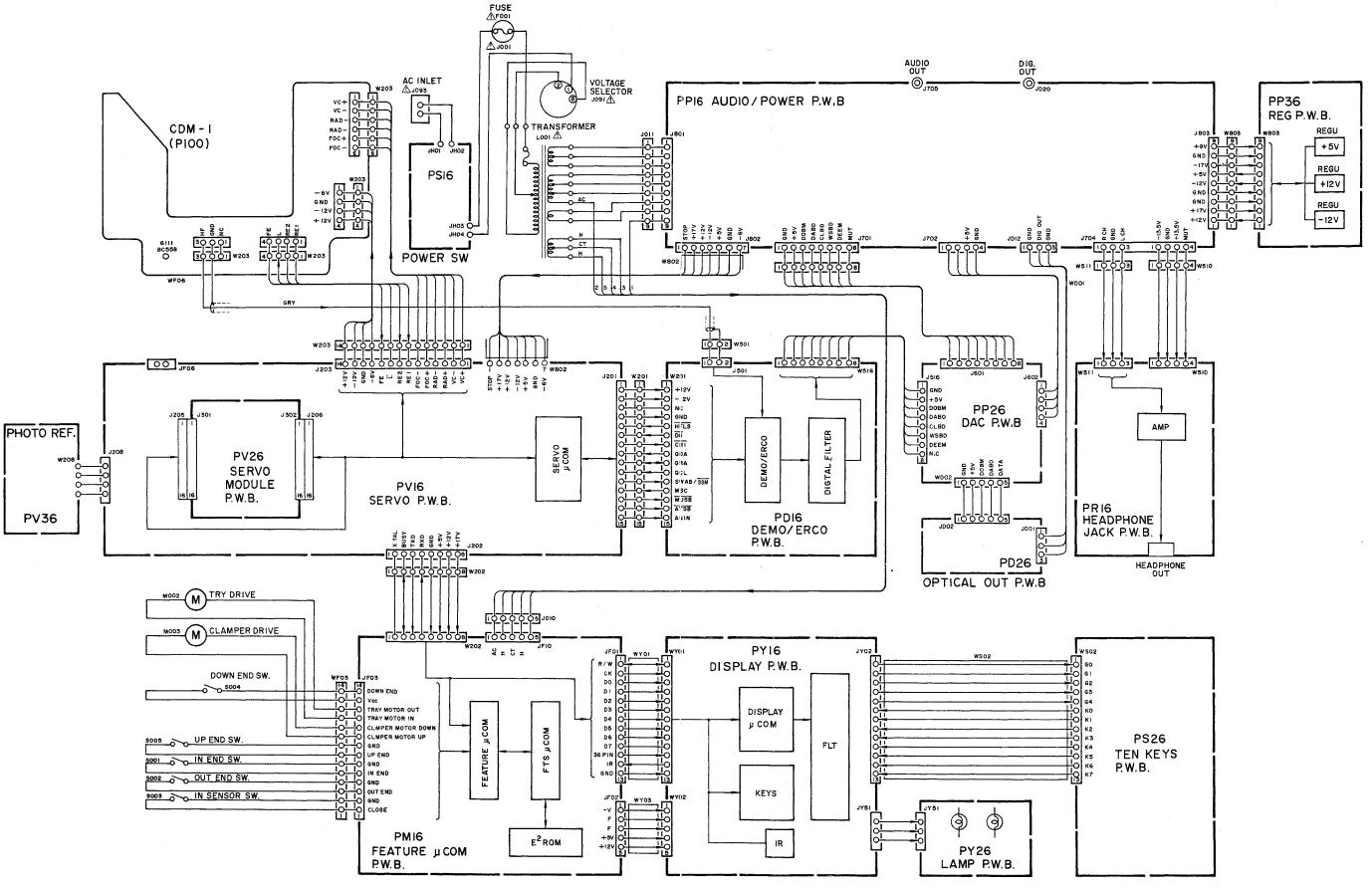

WIRING DIAGRAM

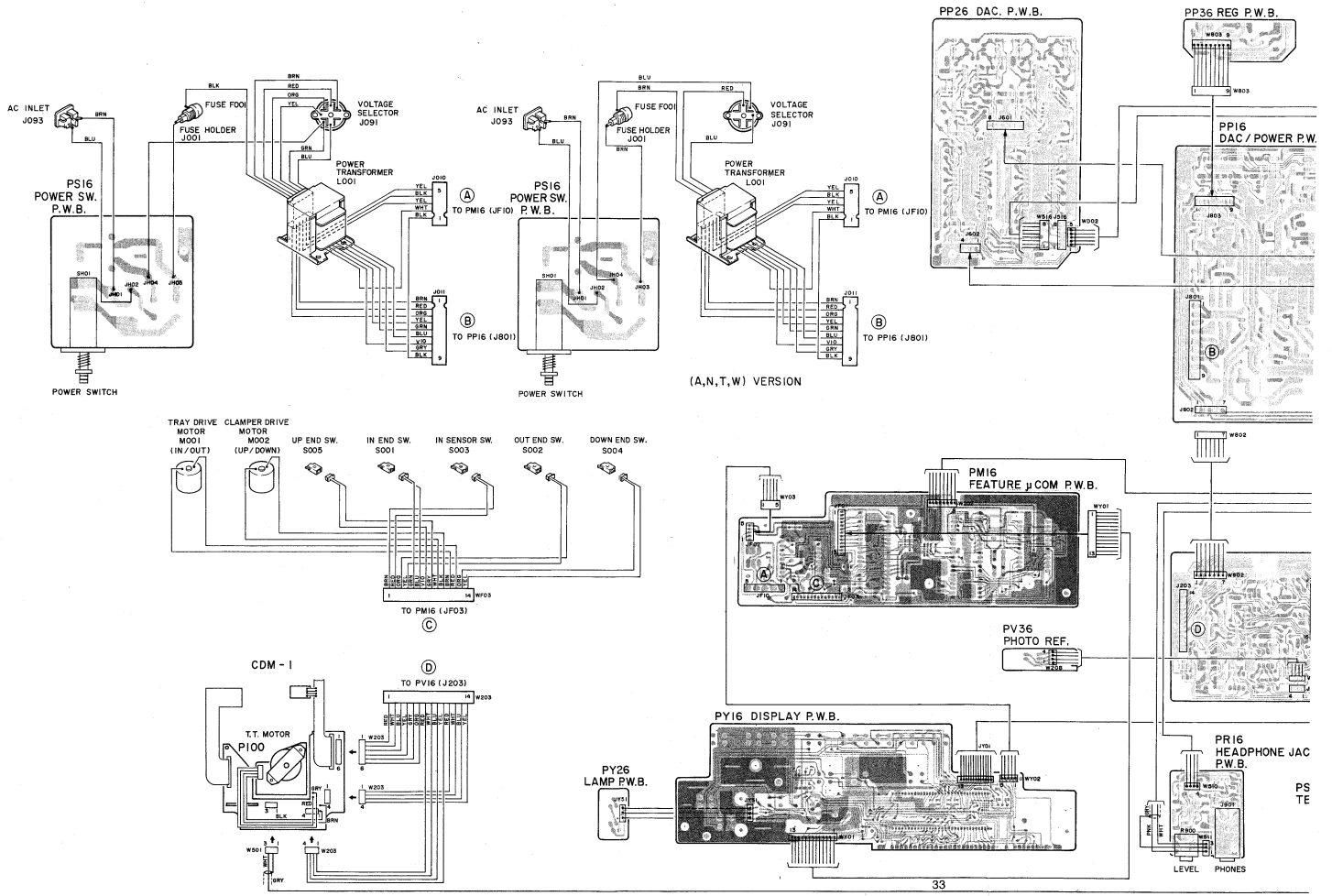

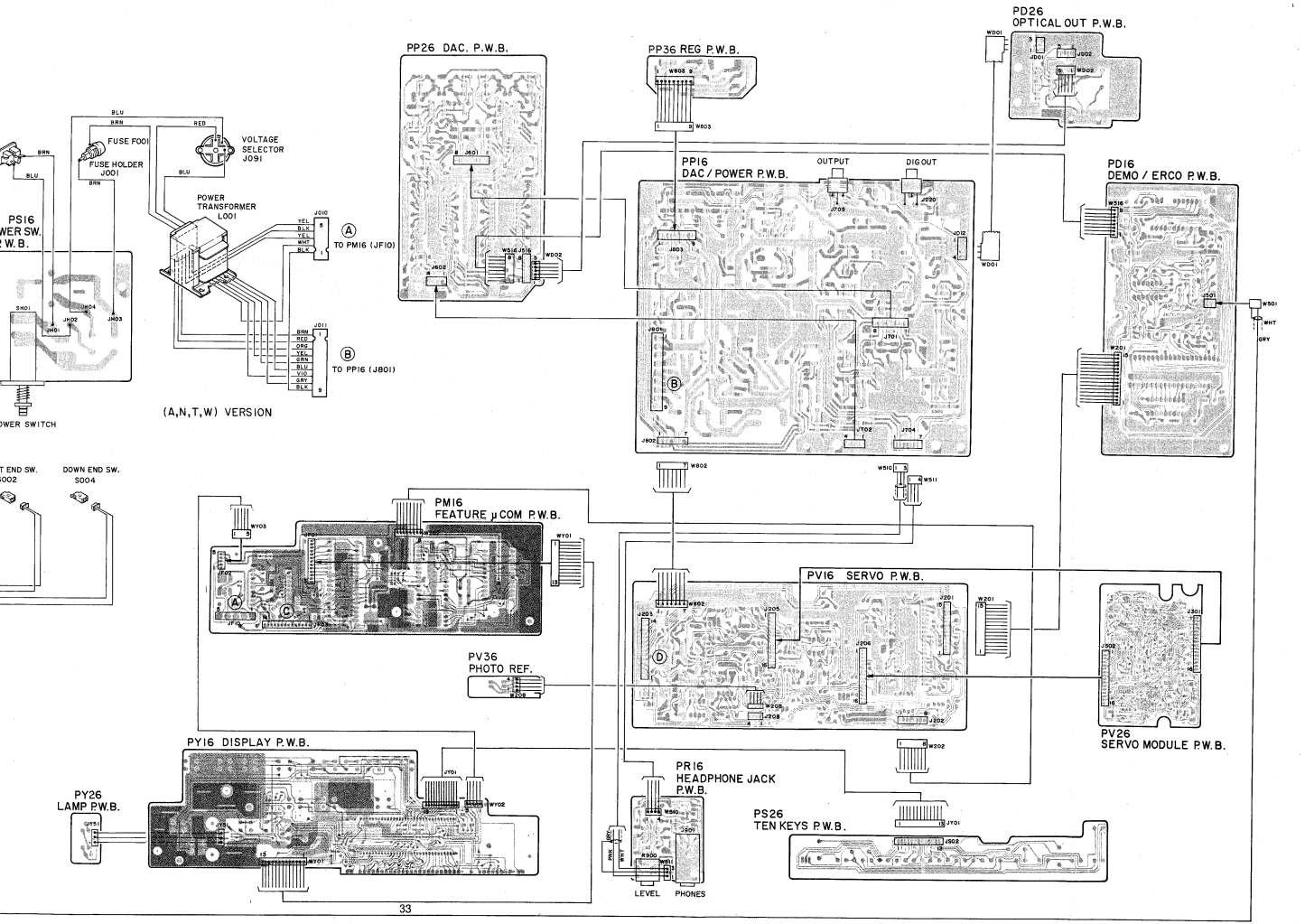
PP26 DAC. P.W.B.
PP36 REG P.W.B.
PD26
OPTICAL OUT P.W.B.
PP16
DAC / POWER P.W.B.
OUTPUT
DIG OUT
PD16
DEMO / ERCO P.W.B.
FUSE F001
FUSE HOLDER
J001
VOLTAGE
SELECTOR
J091
POWER
TRANSFORMER
L001
TO PM16 (JF10)
TO PP16 (J801)
(A,N,T,W) VERSION
PS16
WER SW.
P.W.B.
OWER SWITCH
T END SW.
S002
DOWN END SW.
S004
PM16
FEATURE μCOM P.W.B.
PV16 SERVO P.W.B.
PV36
PHOTO REF.
PV26
SERVO MODULE P.W.B.
PY16 DISPLAY P.W.B.
PY26
LAMP P.W.B.
PR16
HEADPHONE JACK
P.W.B.
PS26
TEN KEYS P.W.B.
LEVEL
PHONES

MZ 2230

PARTS LOCATION (Pattern Side)

"SERVICE INFORMATION IS FOR USE BY QUALIFIED PERSONNEL ONLY —
ANY MISADJUSTMENT OR MISALIGNMENT MAY BE TREATED AS A NON-WARRANTY REPAIR BY ANY MARANTZ SERVICE CENTRE —"

Kind of Common Parts

RESISTOR

R*** (1) GD05 .... 140, Carbon film fixed resistor, ±5% 1/4W
R*** (2) GD05 .... 160, Carbon film fixed resistor, ±5% 1/6W

C*** : **CERAMIC CAP.**
(1) DD1 ..... 370, Ceramic condenser, disc type (titan condenser) Temp. coeff. P350 to N1000 50V

C*** : **CERAMIC CAP.**
(1) DK16 .... 300, High dielectric constant ceramic condenser, disc type (titan variable) Temp. chara. 2B4 50V

C*** : **ELECTROLY CAP. ( )/FILM CAP. ( )**
(1) EA ..... 10, Electrolytic condenser, one-way lead type, tolerance ±20%
(2) DF15 .... 350, Plastic film condenser, one-way type, Mylar, ±5% 50V

* In case of ordering the common parts, please establish the correct parts number of 10 figures by the procedure "ASSIGNMENT OF COMMON PARTS CODES"

Components and wiring are subject to change for modification without notice.

NOTE ON SAFETY:
Symbol ⚠ Fire or electrical shock hazard. Only original parts should be used to replace any part marked with symbol ⚠. Any other component substitution (other than original type), may increase risk of fire or electrical shock hazard.

PS26 DISPLAY P.W.B.

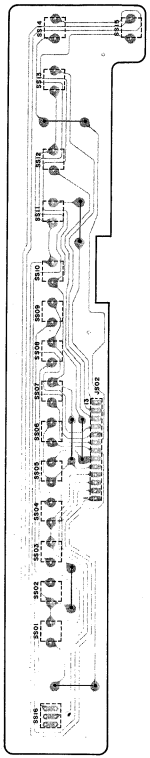

PY16 DISPLAY P.W.B.

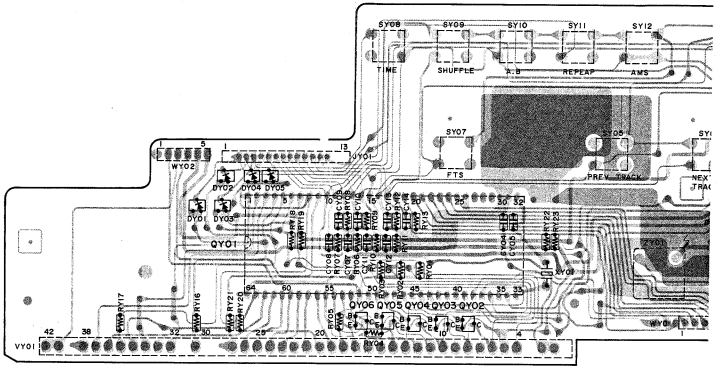

QY02 ~ QY06

QY12 ~ QY14

PMI6 FEATURE μCOM P.W.B.

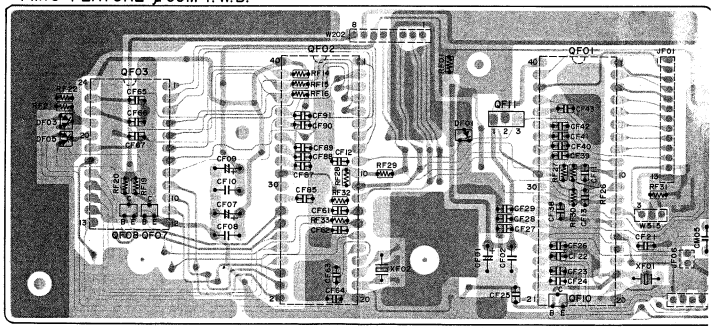

QF06 ~ QF08
QF10

PLAY P.W.B.

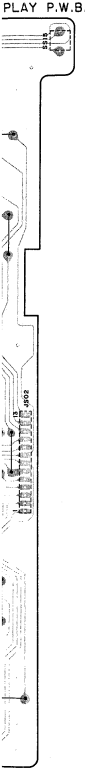

PY16 DISPLAY P.W.B.

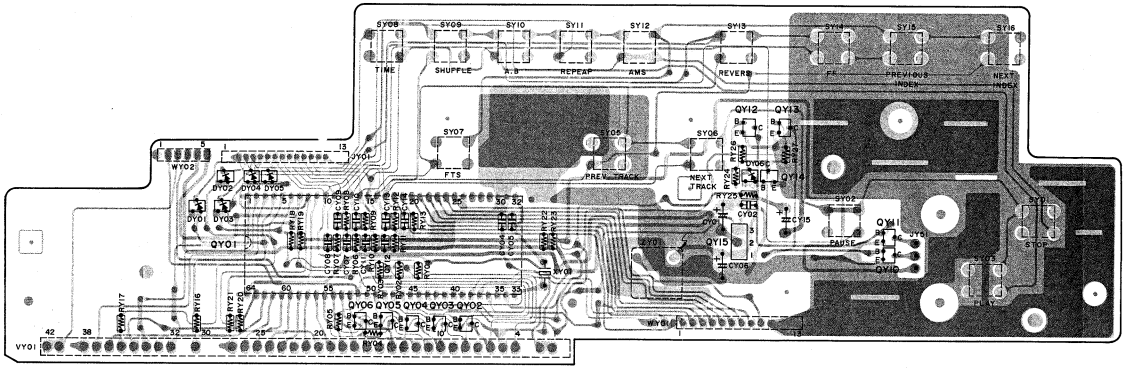

QY02 ~ QY06

QY12 ~ QY14

PY26 LAMP P.W.B.

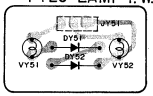

PM16 FEATURE μCOM P.W.B.

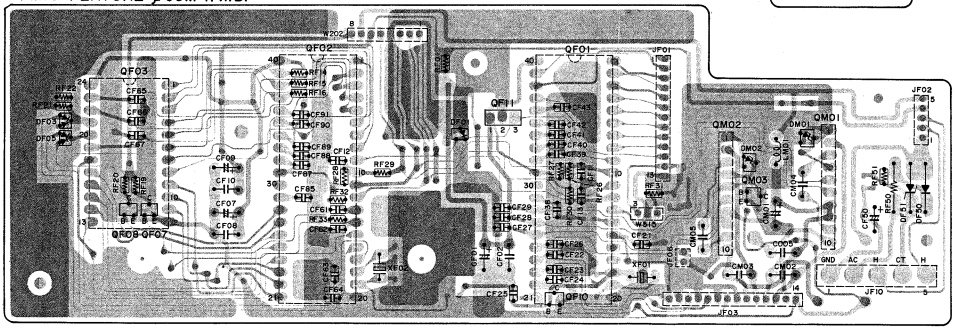

QF06 ~ QF08
QF10

Q314

SCHEMATIC DIAGRAM

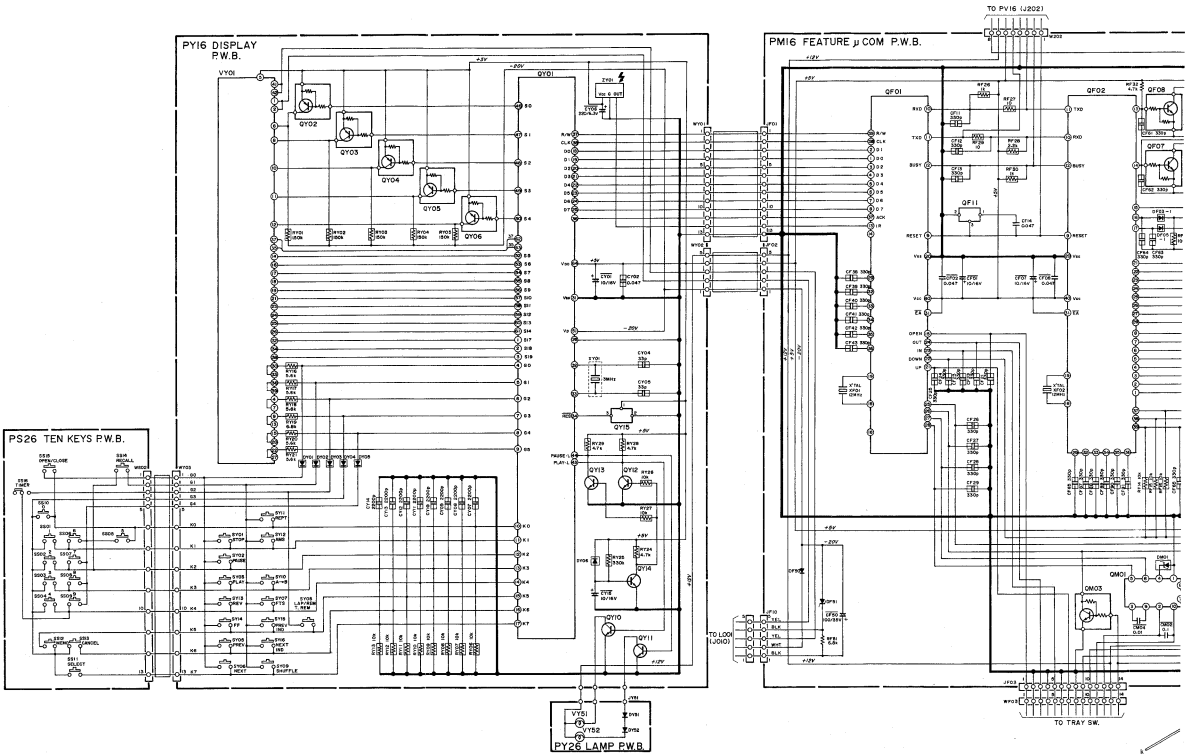

Model CD-94MK2

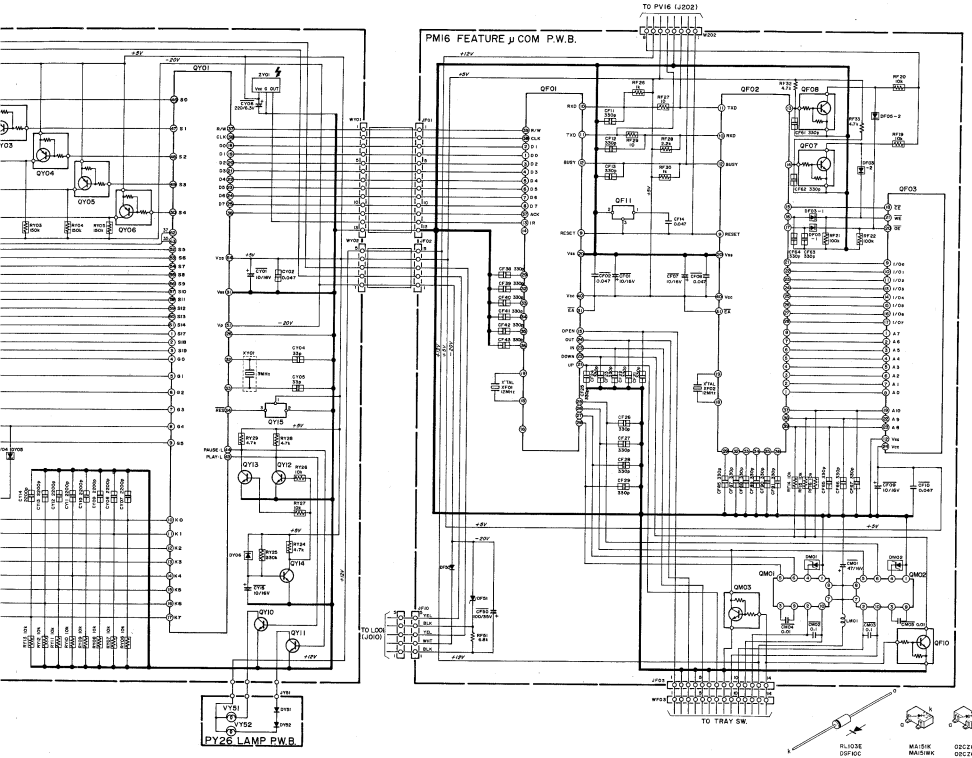

QY01	QY15
LC6554D	PST523D
QY02~QY06	QF11
DTAII4YK	PST524D
QY10,QY11	
2SD1328(S)	
QY12~QY14	
2SC2712(G)	
QM01,QM02	
LB1645N	
QF01	
MSM80C59	
QF02	
MSM80C51	
QF03	
MSM2816A,XL2816A	
QF07,QF08,QF10,QM03	
DTCII4YK	
DF03,DF05	
MA151WK	
DY01~DY06	
MA151K	
DY51,DY52,DF50,DF53	
RL103E,DSF10C	
DM01,DM02	
02CZ6.2	
DF51	
5.6V ZENER	

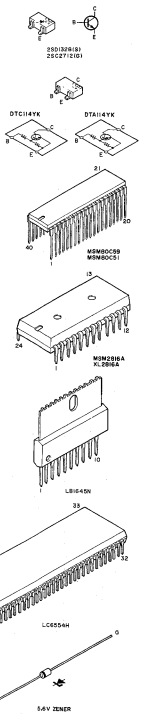

PV16 SERVO P.W.B.

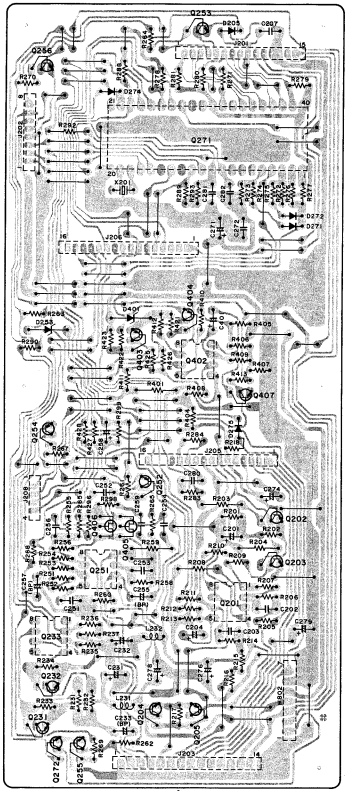

PD16 DEMO/ERCO P.W.B.

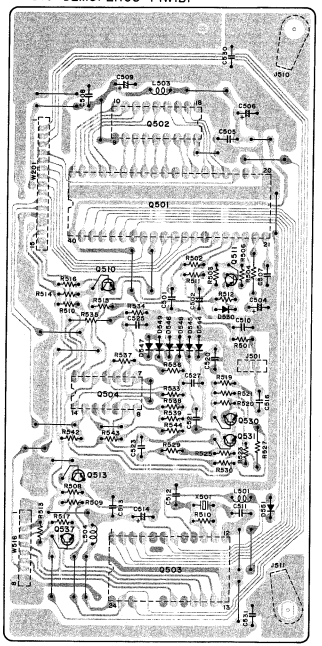

PV26 SERVO MODULE P.W.B.

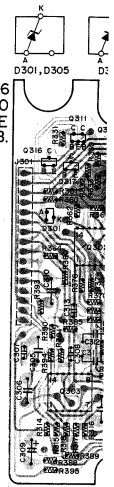

PD16 DEMO/ERCO P.W.B.

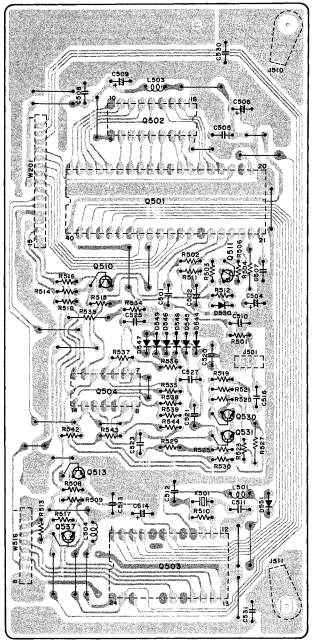

PV26
SERVO
MODULE
P.W.B.

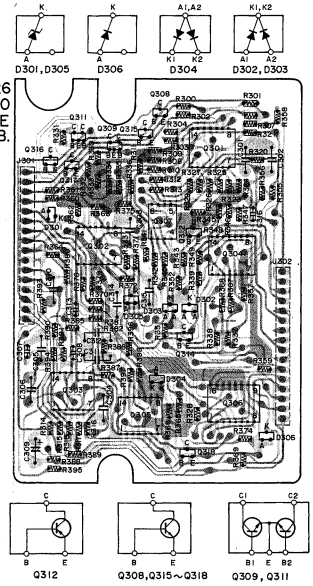

PV36
PHOTO REF P.W.B.

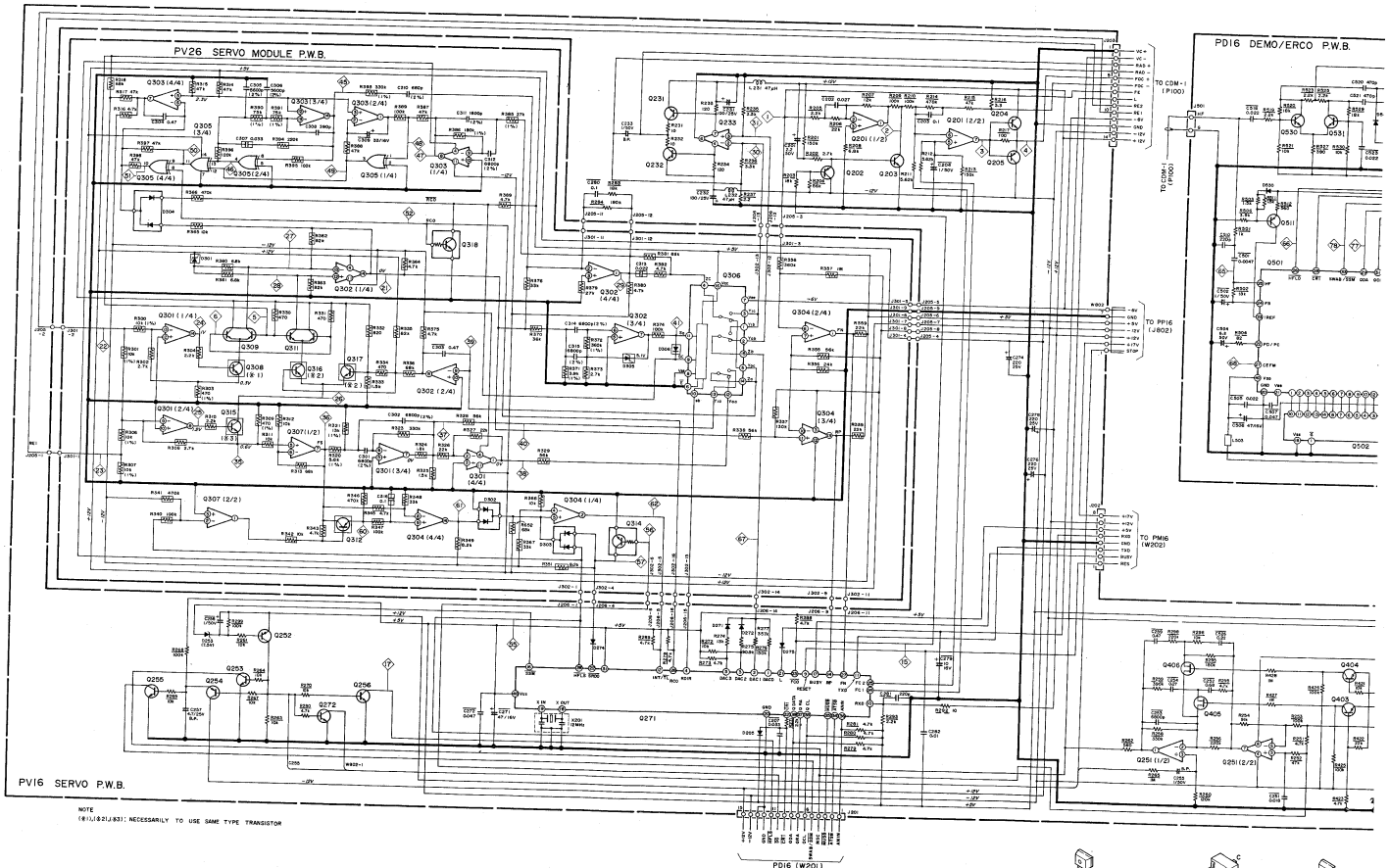

NOTE
(※1),(※2),(※3): NECESSARILY TO USE SAME TYPE TRANSISTOR

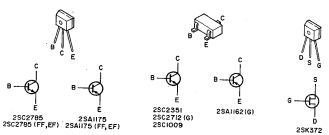

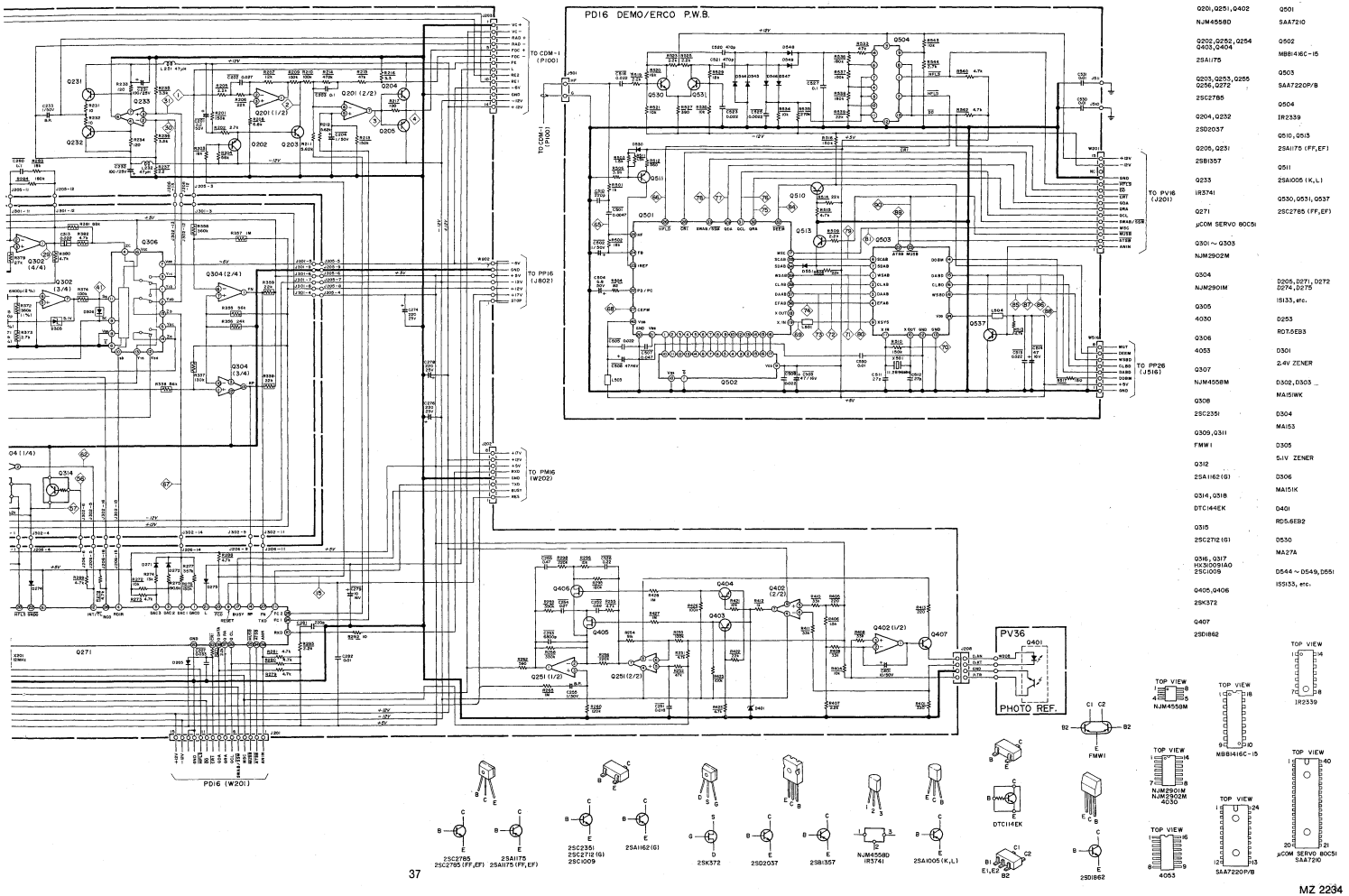

Q201, Q251, Q402	Q501
NJM4558D	SAA7210
Q202, Q252, Q254 Q403, Q404	Q502
2SA1175	MB8141C-15
Q203, Q253, Q255 Q256, Q272	Q503
2SC2785	SAA7220P/B
Q204, Q232	Q504
2SD2037	IR2339
Q205, Q231	Q510, Q513
2SB1357	2SA1175 (FF,EF)
Q233	Q511
IR3741	2SA1005 (K,L)
Q271	Q530, Q531, Q537
μCOM SERVO 80C51	2SC2785 (FF,EF)
Q301 ~ Q303	
NJM2902M	
Q304	D205, D271, D272 D274, D275
NJM2901M	IS133, etc.
Q305	D253
4030	RD7.5EB3
Q306	D301
4053	2.4V ZENER
Q307	D302, D303
NJM4558M	MA151WK
Q308	D304
2SC2351	MA153
Q309, Q311	D305
FMW1	5.1V ZENER
Q312	D306
2SA1162 (G)	MA151K
Q314, Q518	D401
DTC114EK	RD5.6EB2
Q315	D530
2SC2712 (G)	MA27A
Q316, Q317 HK3009IA0 2SC1009	D544 ~ D549, D551
Q405, Q406	IS133, etc.
2SK372	
Q407	
2SD1862	

MZ 2234

PP26 DAC P.W.B.

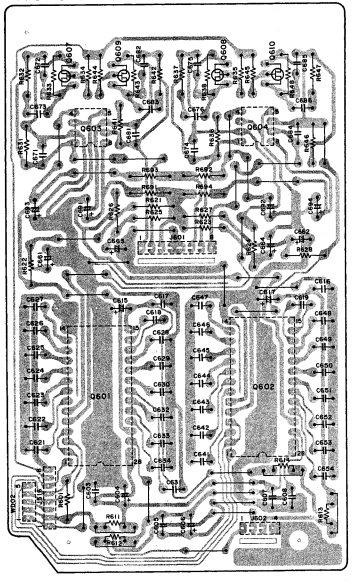

PP16 DAC/POWER P.W.B.

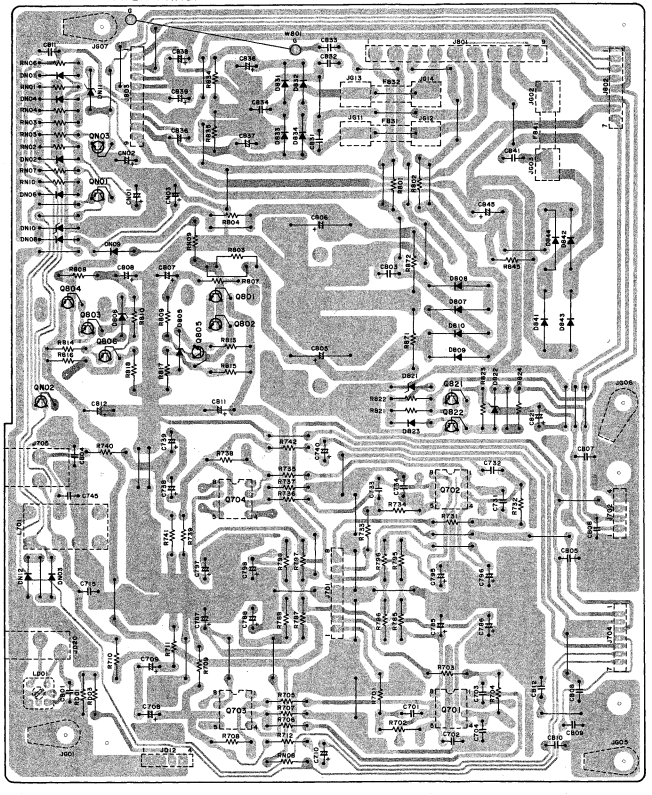

PP16 DAC/POWER P.W.B.

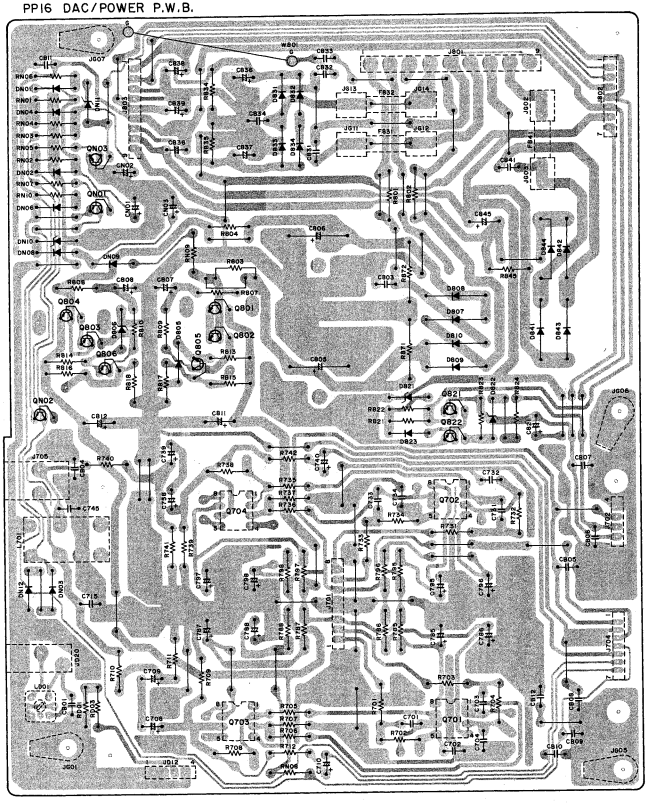

PD26 OPTICAL OUT P.W.B.

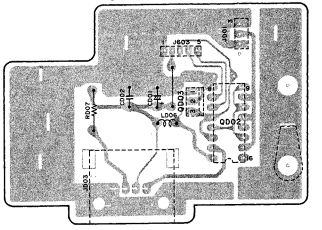

PP36 3REG P.W.B.

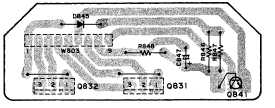

PR16 HEADPHONE AMP P.W.B.

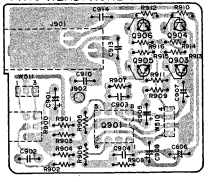

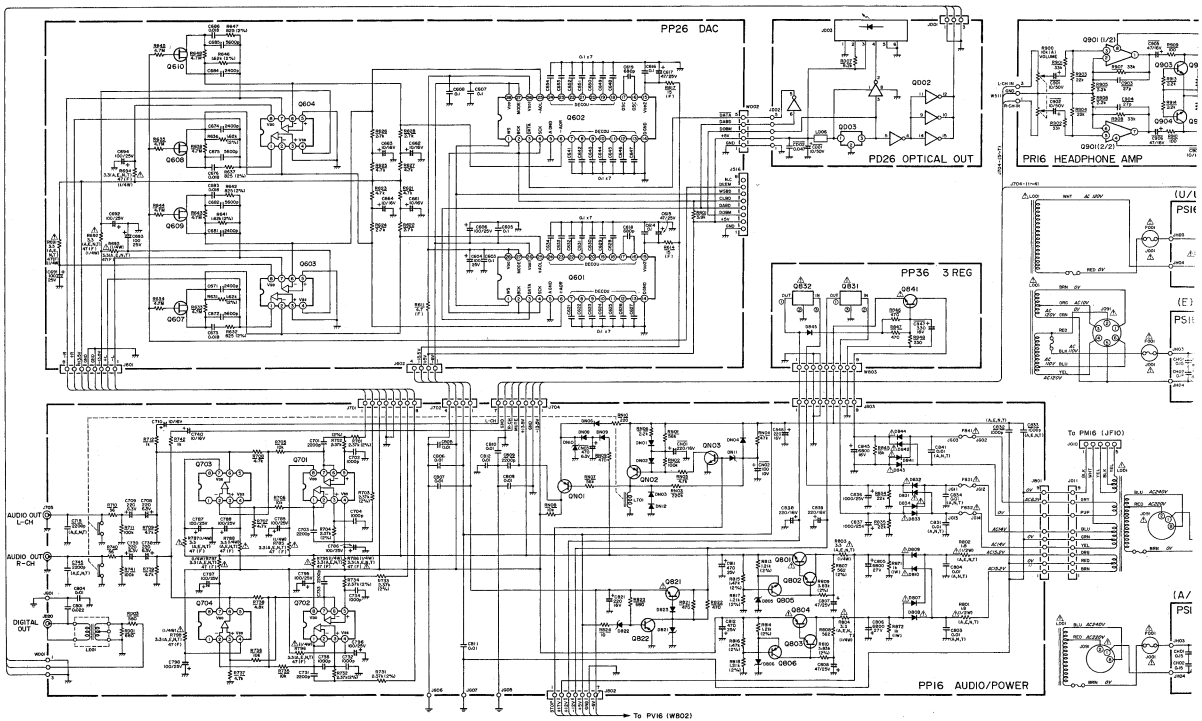
PP26 DAC
PD26 OPTICAL OUT
PR16 HEADPHONE AMP
PP36 3 REG
PP16 AUDIO/POWER
AUDIO OUT L-CH
AUDIO OUT R-CH
DIGITAL OUT
To PM16 (JF10)
To PV16 (W802)

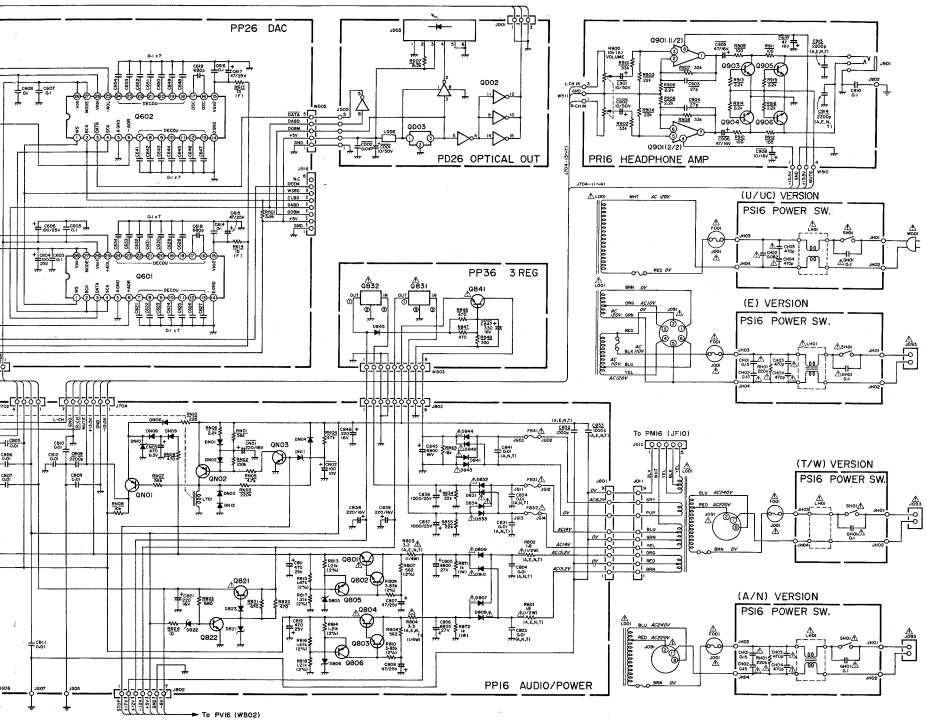
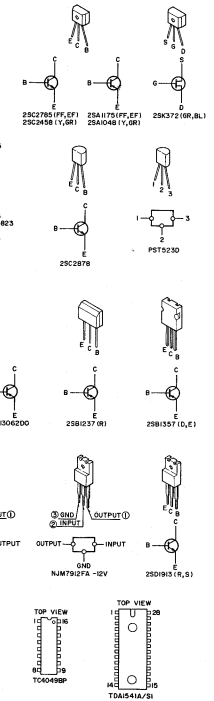
Q601, Q602	D805, D806
TDA1541A/SI	5.6V
Q603, Q604, Q701, Q702	D807 ~ D810
NJM4580DD	W06B
Q607 ~ Q610	D821
2SK372 (GR, BL)	RD7.5E B3
Q703, Q704	D822
NJM5534D	4.7V
Q801	D831 ~ D834, D845
2SC3298 (O, Y)	RL103E
Q802	D841 ~ D844
2SC2458 (Y, GR)	U05B
Q803	DN01 ~ DN04, DN06
2SA1048 (Y, GR)	DN08, DN09, DN12, D823
Q804	1S1555, 1S2473, etc.
2SA1306 (FF, EF)	DN10, DN11
Q805, QN03	3.9V
2SC2785 (FF, EF)	
Q821	
2SB1357 (D, E)	
Q831	
NJM7912FA -12V	
Q832	
NJM7812FA +12V	
Q841	
2SD1913 (R, S)	
Q901	
NJM4556D	
Q903 ~ Q906	
2SC2878	
Q002	
TC4049BP	
Q003	
PST5230	
QN01, Q806, Q822	
2SA1175 (FF, EF)	
QN02	
2SB1237 (R)